# APPENDIX B STREET TYPICAL SECTIONS

The street typical sections illustrated in the following pages are intended to be incorporated into the City of Evans design standards. These sections show recommendations for some of the current street sections as well as some new sections. The focus of the recommendations are tied to the planning aspects such as laneage, street right-of-way, sidewalk width, landscaping width and parking. Threshold daily traffic is given for each street type as a guideline for when a particular section should be used.

Two new street sections were added to the current street typical sections:

1. The Gateway Arterial section includes wider right-of-way to allow for aesthetic landscaping of streetscaping that would provide a gateway feature to the community. It is proposed that this particular section would be used for short segments (200 to 800 feet) of the following streets:

    - 65th Avenue
    - 35th Avenue
    - Two Rivers Parkway
    - 37th Street west of US 85

    The specific length of these segments would vary depending upon location physical constraints.

2. A Commercial Collector section would be used in shopping center areas or activity centers. The purpose of this section is to allow shorter sections of streets that would not normally have collector classifications to be built to allow greater capacity at major intersections. Parking would be allowed and wider sidewalks would facilitate the vehicular/pedestrian interface.

Other updates to the typical street sections include:

- A wider median to allow for a raised median for the arterial street
- Designation of the boulevard collector as an optional street section
- Turn lanes at major intersections for the minor collector
- Wider sidewalk for the minor collector

Areas east of US 85 encompass a unique area. It is intended that the existing character of these older areas of the City be maintained and that typical street sections be determined on a case by case basis.

## City of Evans Transportation Plan

# GATEWAY ARTERIAL

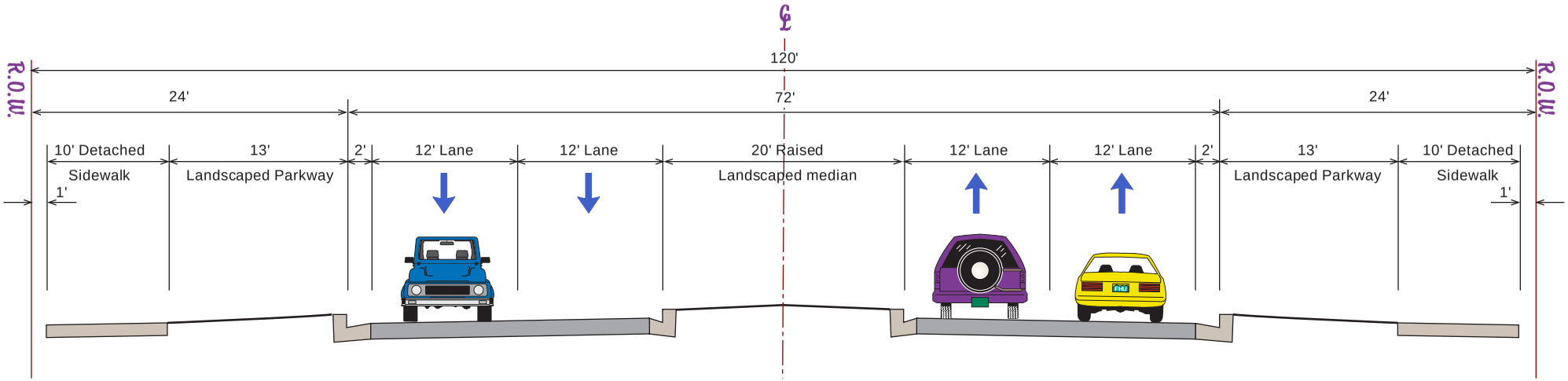


**NOTES:**

- ADT 16,000 to 32,000

02-240 8/27/03

FELSBURG HOLT & ULLEVIG

*engineering paths to transportation solutions*

# City of Evans Transportation Plan

# ARTERIAL

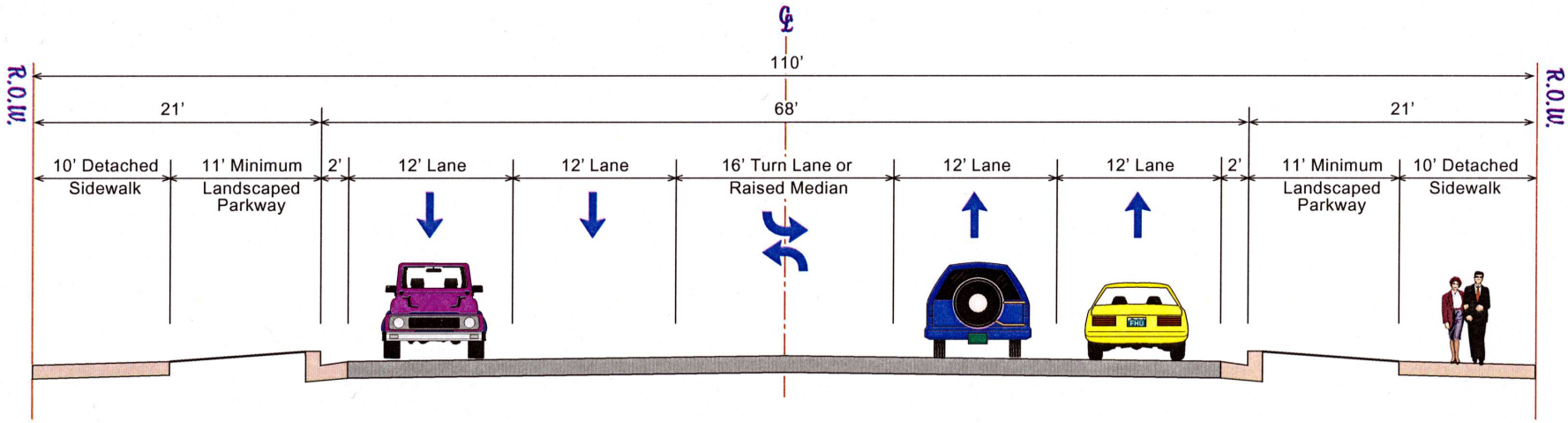


## NOTES:

- ADT 16,000 to 32,000

02-240 8/27/03

FELSBURG HOLT & ULLEVIG

*engineering paths to transportation solutions*

City of Evans Transportation Plan

# MAJOR COLLECTOR

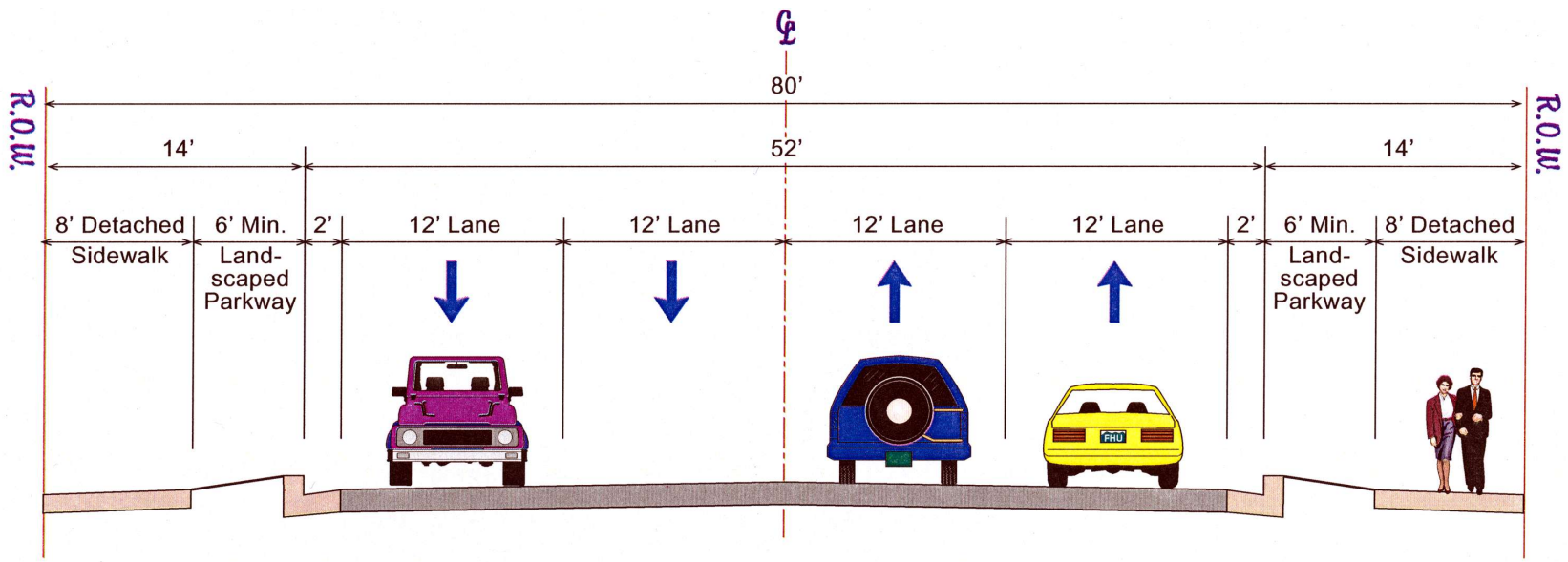


NOTES:

- ADT 7,000 to 16,000

02-240 8/27/03

FELSBURG HOLT & ULLEVIG

*engineering paths to transportation solutions*

City of Evans Transportation Plan

# COMMERCIAL COLLECTOR

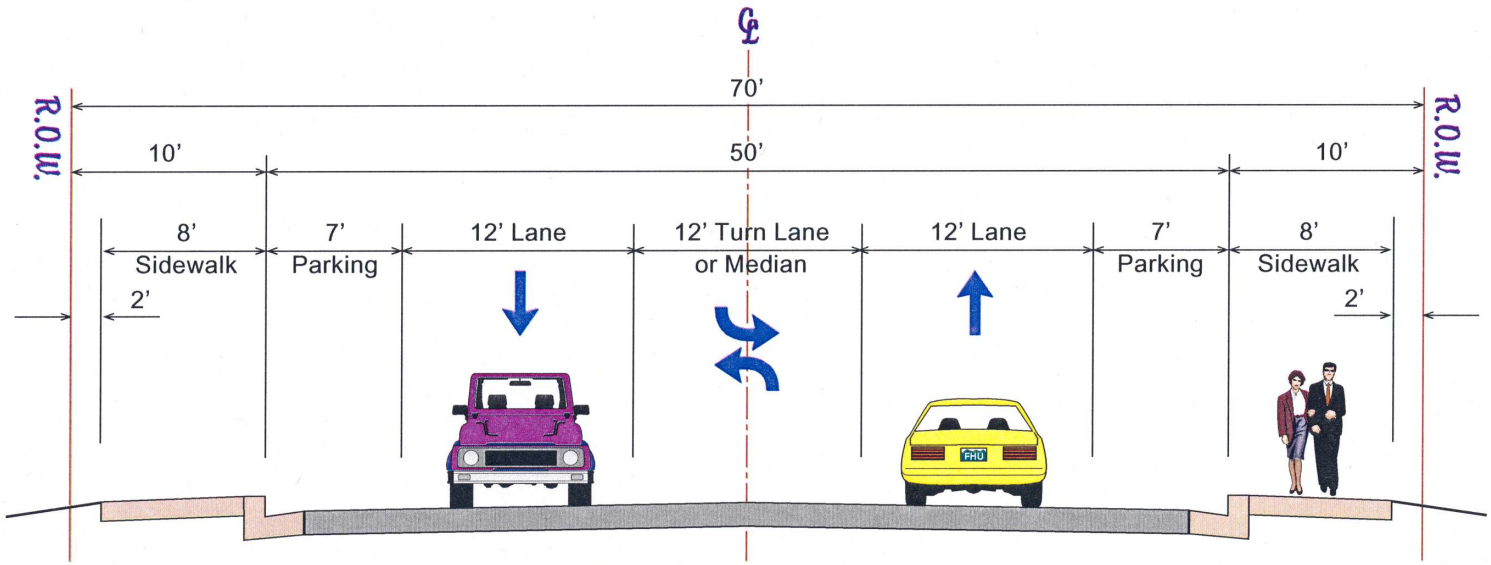


NOTES:

- ADT 4,000 to 7,000

02-240 8/27/03

FELSBURG HOLT & ULLEVIG

*engineering paths to transportation solutions*

City of Evans Transportation Plan

# MINOR COLLECTOR

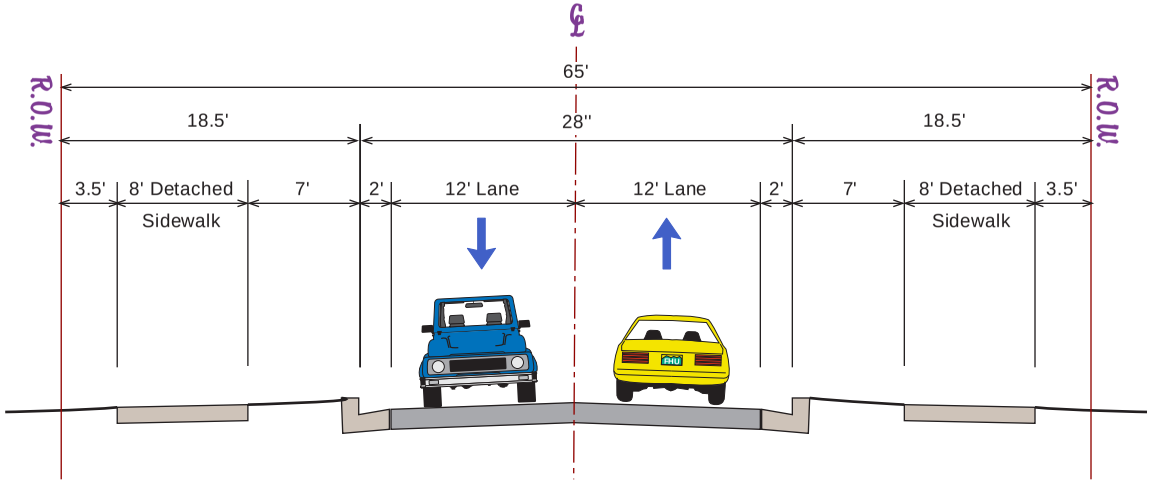


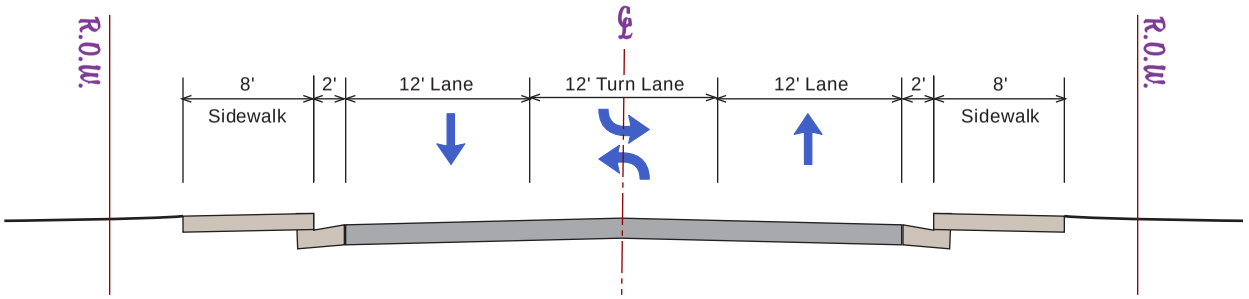


NOTES:

- ADT 1,500 to 4,000

02-240 8/27/03

FELSBURG HOLT & ULLEVIG

*engineering paths to transportation solutions*

City of Evans Transportation Plan

# BOULEVARD COLLECTOR
## (Optional Section)

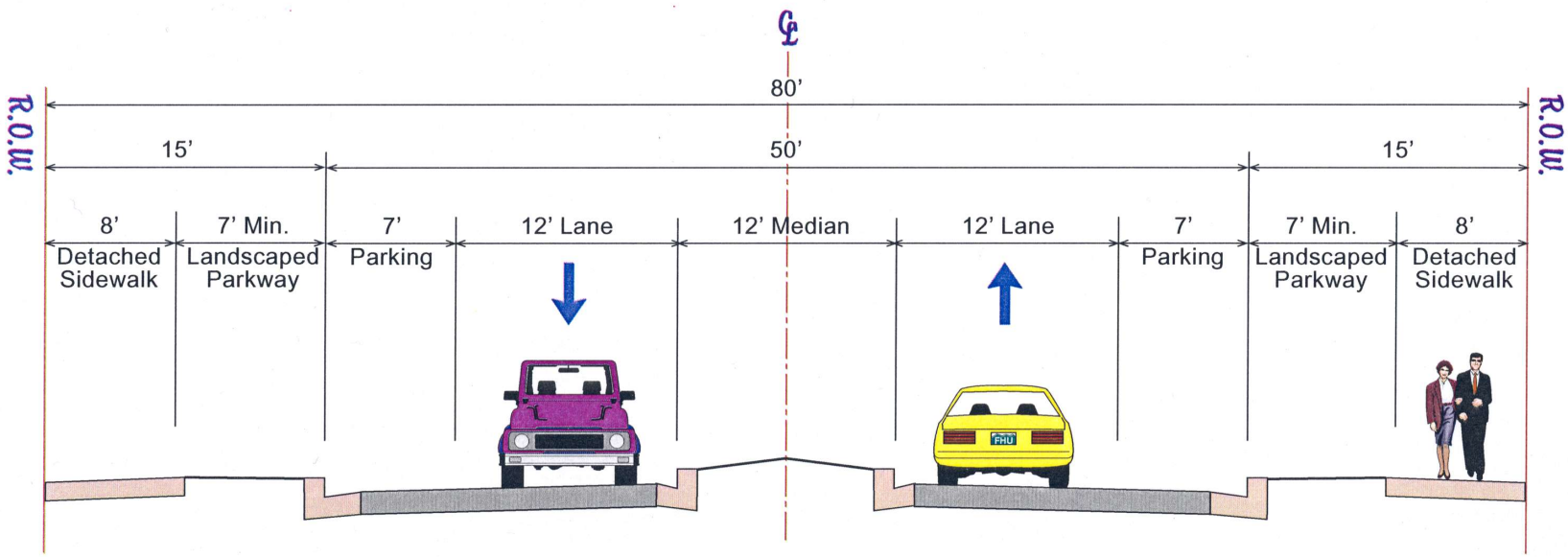


NOTES:

- ADT 1,500 to 4,000

02-240 8/27/03

FELSBURG HOLT & ULLEVIG

*engineering paths to transportation solutions*

# City of Evans Transportation Plan

# LOCAL #1

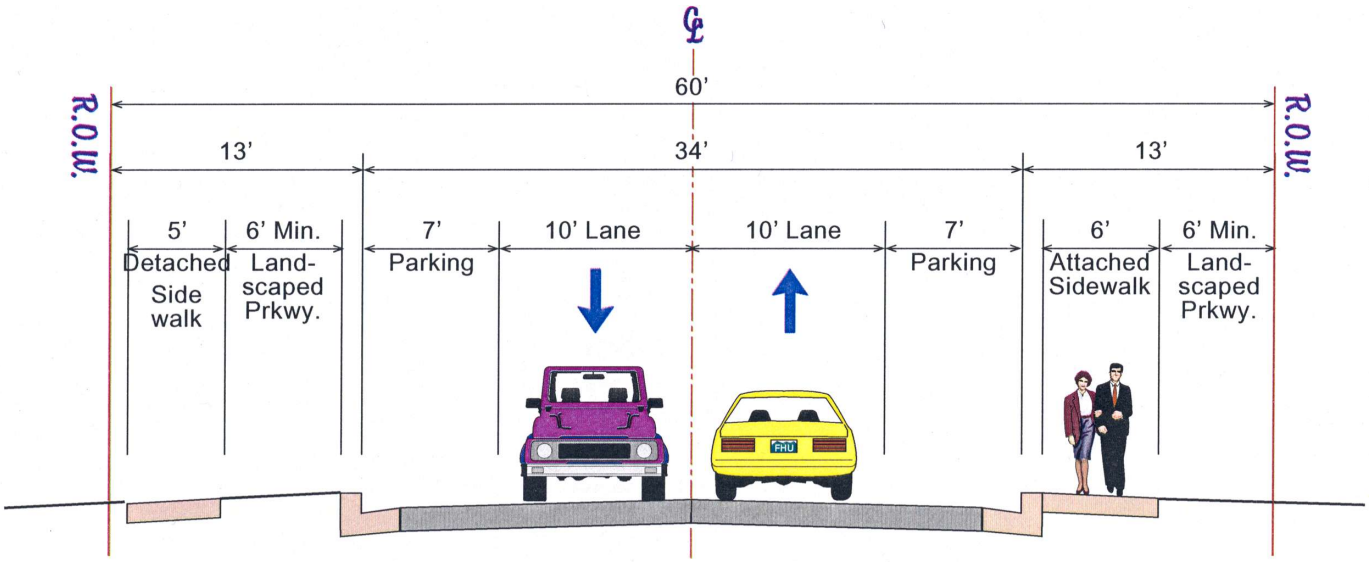


NOTES:

- ADT < 1,500

02-240 8/27/03

FELSBURG HOLT & ULLEVIG

*engineering paths to transportation solutions*

# City of Evans Transportation Plan

# LOCAL #2

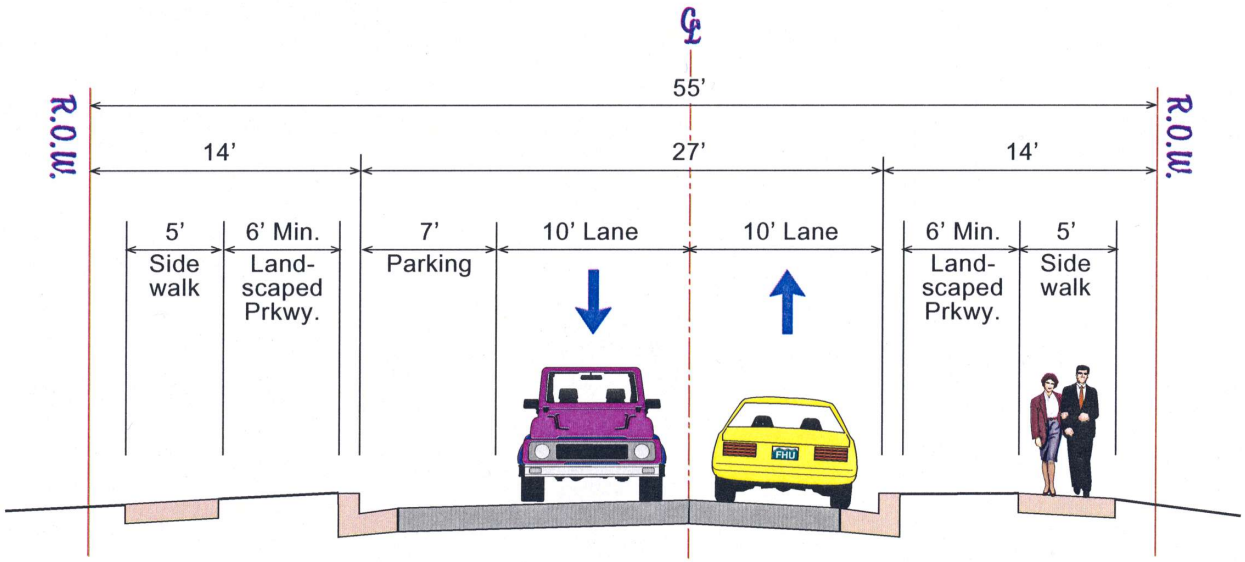


**NOTES:**

- ADT < 1,500

02-240 8/27/03

FELSBURG HOLT & ULLEVIG

*engineering paths to transportation solutions*

City of Evans Transportation Plan

# RURAL LOCAL

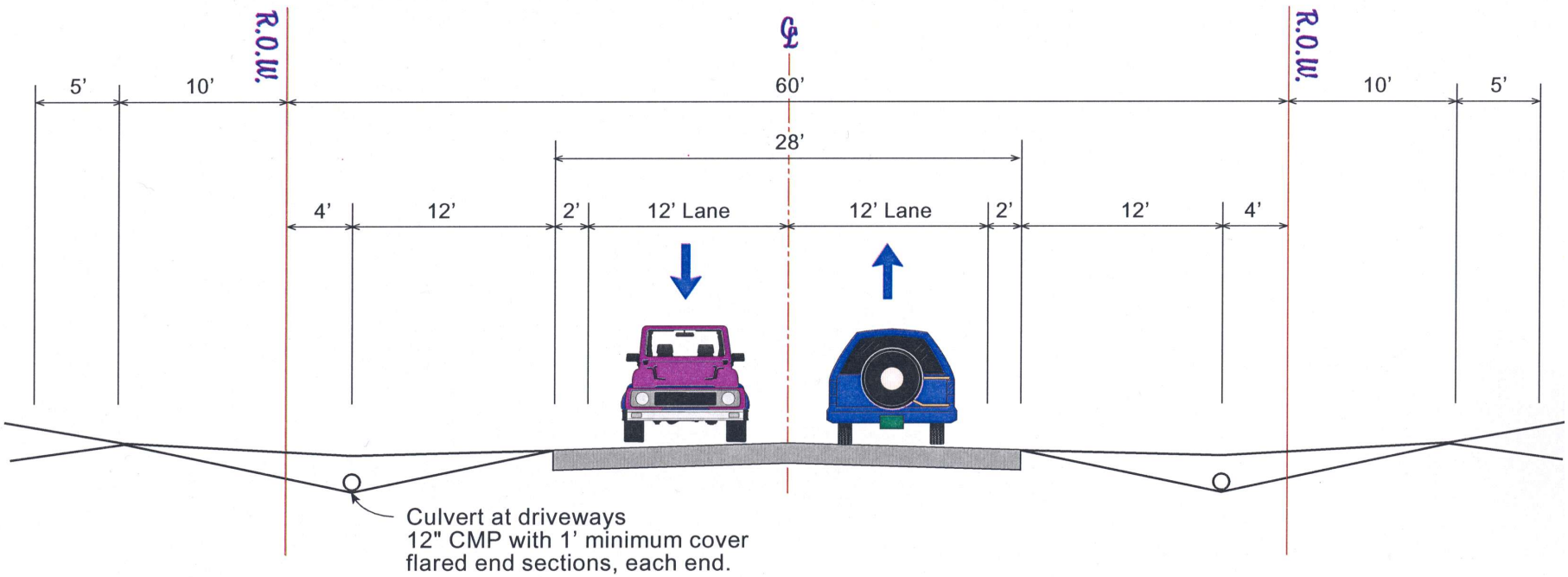


NOTES:

✦ ADT < 1,000

02-240 4/28/04

FELSBURG HOLT & ULLEVIG

*engineering paths to transportation solutions*
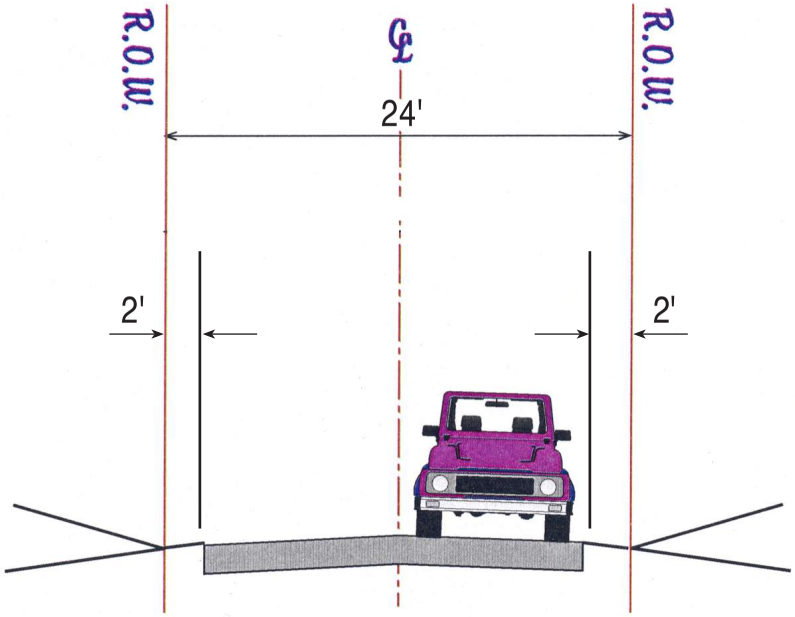
# ALLEY