Owner/Developer	Engineer	Surveyor
City of Evans	HDR Engineering, Inc.	King Surveyors, Inc.
1100 37th Street	303 E. 17th Ave., Suite 700	9299 Eastman Park Drive
Evans, CO 80620-2036	Denver, CO 80203-1256	970-686-5011
970-339-5344	303-764-1520	Windsor, CO 80550
Attn: Cameron Parrott	Attn: John Seyer	

All work shall be constructed to the City of Evans Standards and Specifications

Approved by:_____ Date:_____
Director of Public Works

The City of Evans COLORADO

Agency	Contact	Phone
Comcast 3737 W. 10th Street Greeley, CO 80634	Justin Van Patten	970-336-6013
Atmos Energy 1200 11th Avenue Greeley, CO 80631	Jerry Adams	970-304-2075
Duke Energy 1324 N. 7th Avenue Greeley, CO 80631	Lew Hagenlock	303-572-8002
Evans Fire Department 1100 37th Street Evans, CO 80620	Warren Jones	970-475-1108
Qwest 12680 Weld County Road 58 Greeley, CO 80634	Carson Ortega	970-350-2941
Xcel Energy 1500 6th Avenue Greeley, CO 80631	Terry Stencil	800-328-8226

HDR

HDR Engineering, Inc.

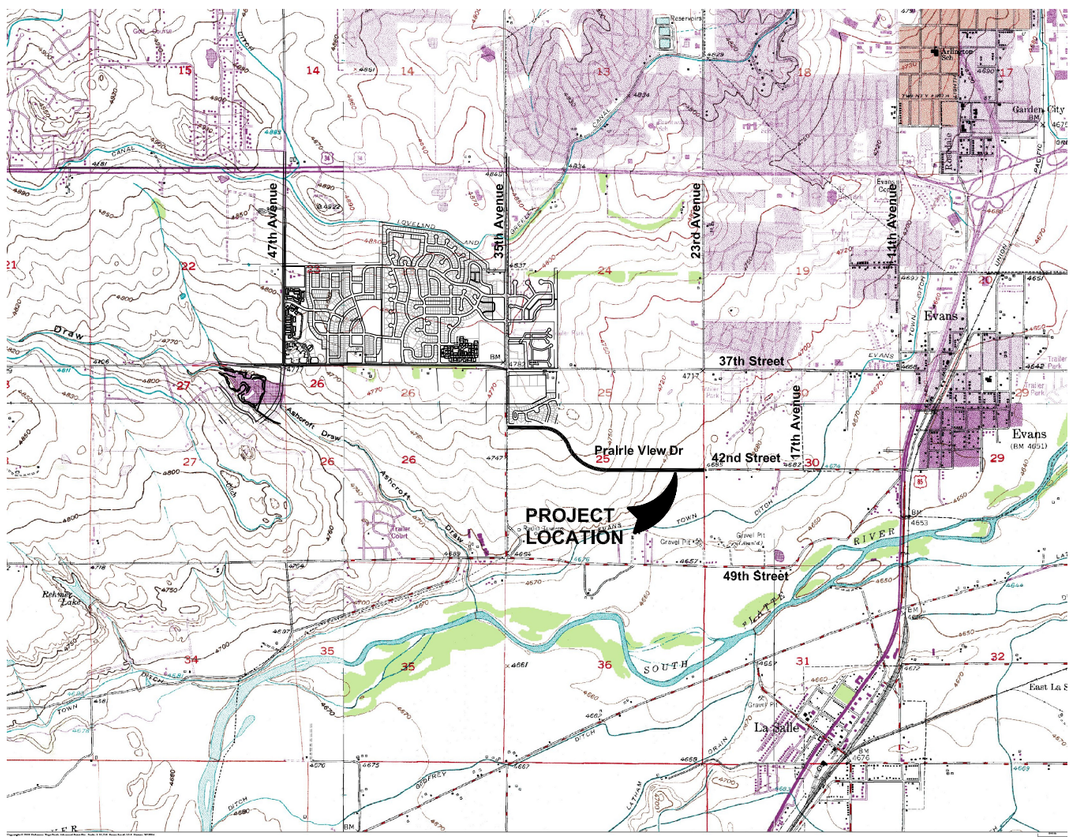

VICINITY MAP
SCALE: 1"=2000'

100% DESIGN FOR:

Prairie View Drive

HDR Project No.
000000000058704

City of Evans, Colorado
February, 2008

INDEX OF DRAWINGS

INDEX NO.	SHEET TITLE
G-01	COVER SHEET
G-02	LEGEND, ABBREVIATIONS, SYMBOLS AND GENERAL NOTES
G-03	TYPICAL SECTIONS
V-01	SURVEY CONTROL
V-02	SURVEY CONTROL
V-03	SURVEY CONTROL
C-01	PRAIRIE VIEW DRIVE PLAN AND PROFILE - STA 100+00 TO 114+50
C-02	PRAIRIE VIEW DRIVE PLAN AND PROFILE - STA 114+50 TO 129+00
C-03	PRAIRIE VIEW DRIVE PLAN AND PROFILE - STA 129+00 TO 143+50
C-04	PRAIRIE VIEW DRIVE PLAN AND PROFILE - STA 143+50 TO 158+39
E-01	EROSION CONTROL PLAN - STA 100+00 TO 129+00
E-02	EROSION CONTROL PLAN - STA 129+00 TO 158+39.11
S-01	SIGNING AND STRIPING PLAN - STA 100+00 TO 129+00
S-02	SIGNING AND STRIPING PLAN - STA 129+00 TO 158+39.11
D-01	DETAILS
D-02	DETAILS
D-03	DETAILS
L-01	PLANTING PLAN
L-02	PLANTING PLAN
L-03	PLANTING PLAN
L-04	PLANTING PLAN
L-05	PLANTING PLAN AND DETAILS
IR-00A TO IR-00B	IRRIGATION COVER SHEET
IR-01 TO IR-05	IRRIGATION PLAN
IR-06 TO IR-14	IRRIGATION DETAILS
E1	ELECTRICAL PLAN AND DETAILS

Not in Contract

Not in Contract

3/5/2008 10:28:33 AM

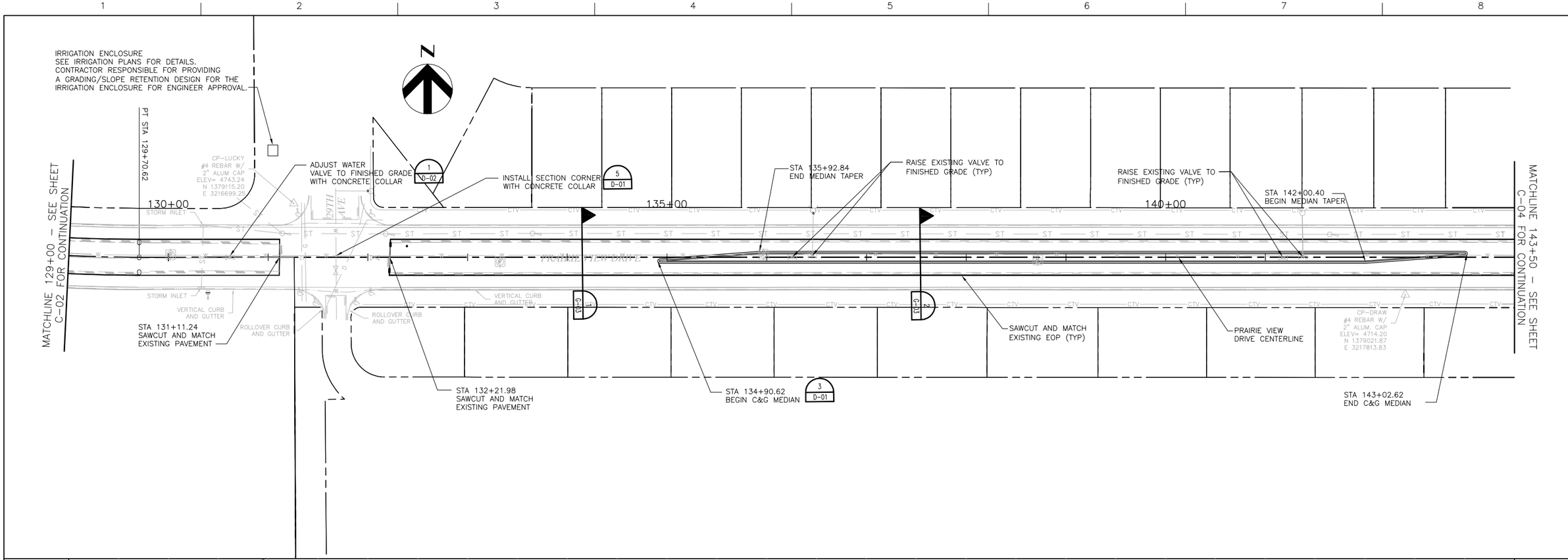

HDR
HDR Engineering, Inc.

ISSUE	DATE	DESCRIPTION
4	2/22/08	100% FINAL DESIGN
3	1/15/08	100% DESIGN REVIEW SUBMITTAL
2	7/13/07	90% DESIGN REVIEW SUBMITTAL
1	4/27/07	30% PRELIMINARY DESIGN

PROJECT MANAGER	JOHN SEYER
PROJECT NUMBER	000000000058704

Prairie View Drive

The City of Evans COLORADO

PRAIRIE VIEW DRIVE
PLAN AND PROFILE
STA 129+00 TO STA 143+50

FILENAME	00C-03.dwg
SCALE	1" = 50'

SHEET
C-03

3/5/2008 10:35:27 AM

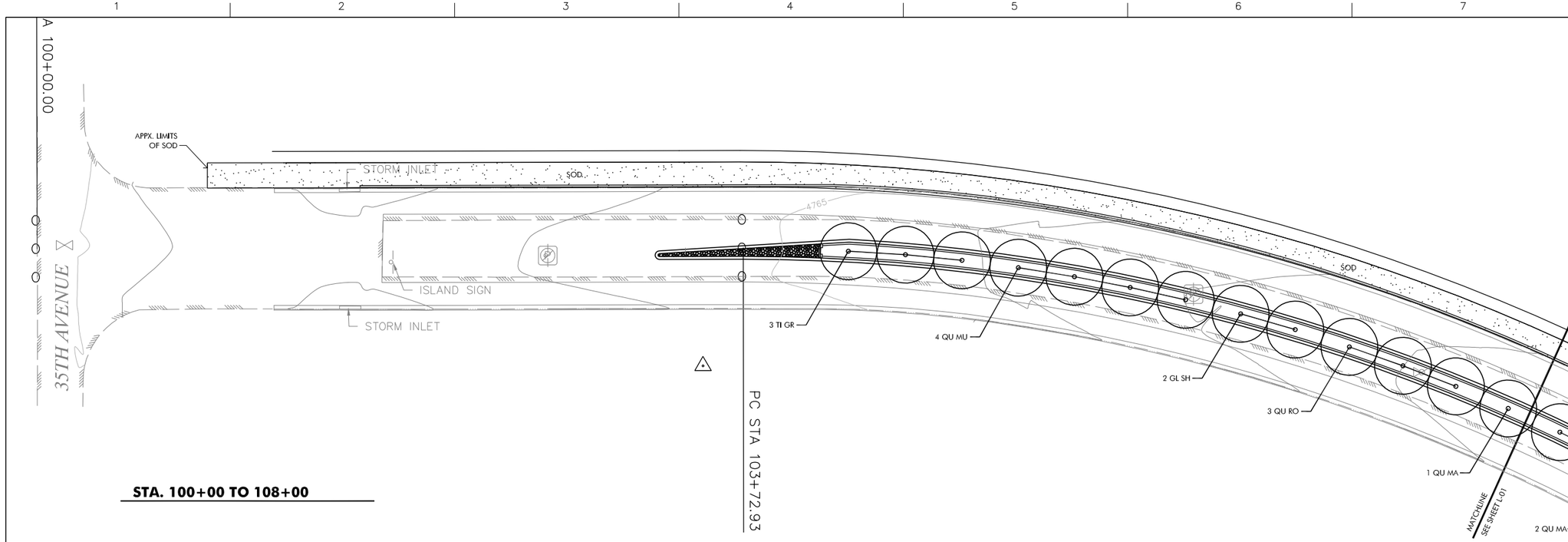

STA. 100+00 TO 108+00

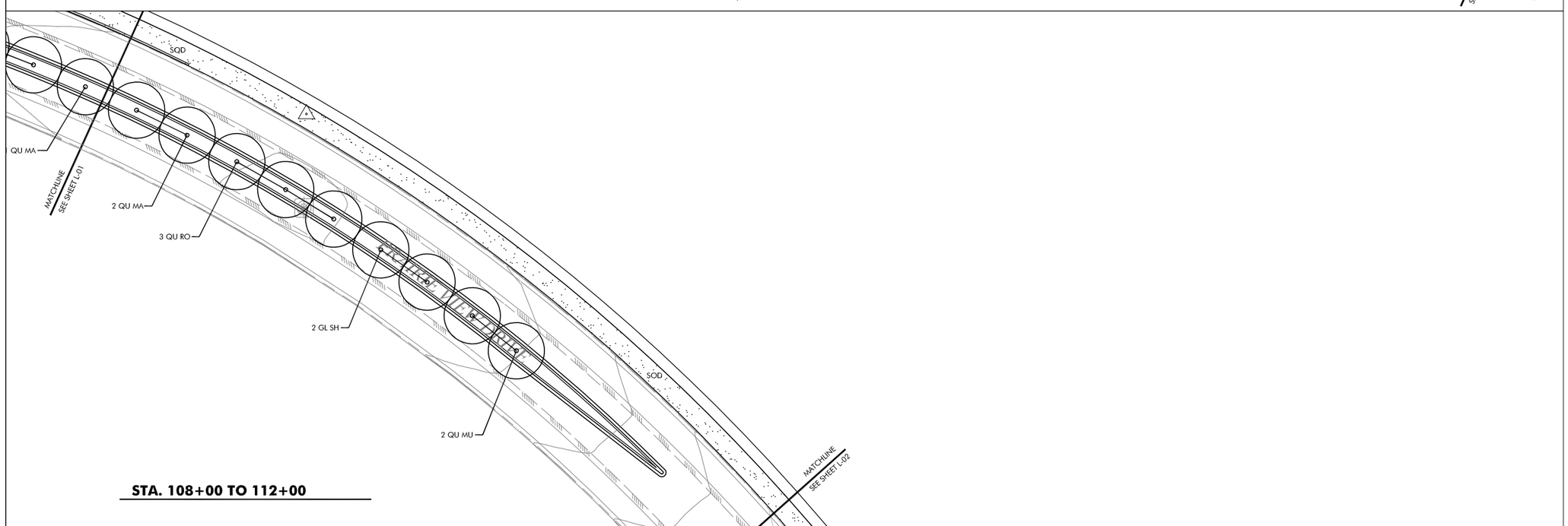

STA. 108+00 TO 112+00

CALL UTILITY NOTIFICATION CENTER OF COLORADO

1-800-922-1987

OR 534-6700 IN METRO DENVER

CALL 2 BUSINESS DAYS IN ADVANCE BEFORE YOU DIG, GRADE, OR EXCAVATE FOR THE MARKING OF UNDERGROUND MEMBER UTILITIES

bha

BHA Design Incorporated
4803 Innovation Drive
Fort Collins, Colorado 80525
voice: 970.223.7577
fax: 970.223.1827

HDR

HDR Engineering, Inc.

ISSUE	DATE	DESCRIPTION
4	2/22/08	100% FINAL DESIGN
3	1/15/08	100% DESIGN REVIEW SUBMITTAL
2	7/13/07	90% DESIGN REVIEW SUBMITTAL
1	4/27/07	30% PRILIMINARY DESIGN

PROJECT MANAGER	ANGELA MILEWSKI
PROJECT NUMBER	000000000055451

Prairie View Drive

The City of Evans COLORADO

PLANTING PLAN

0 30' 60'

FILENAME	7015-P-PLAN.DWG
SCALE	1' = 30'-0"

SHEET **L-01**

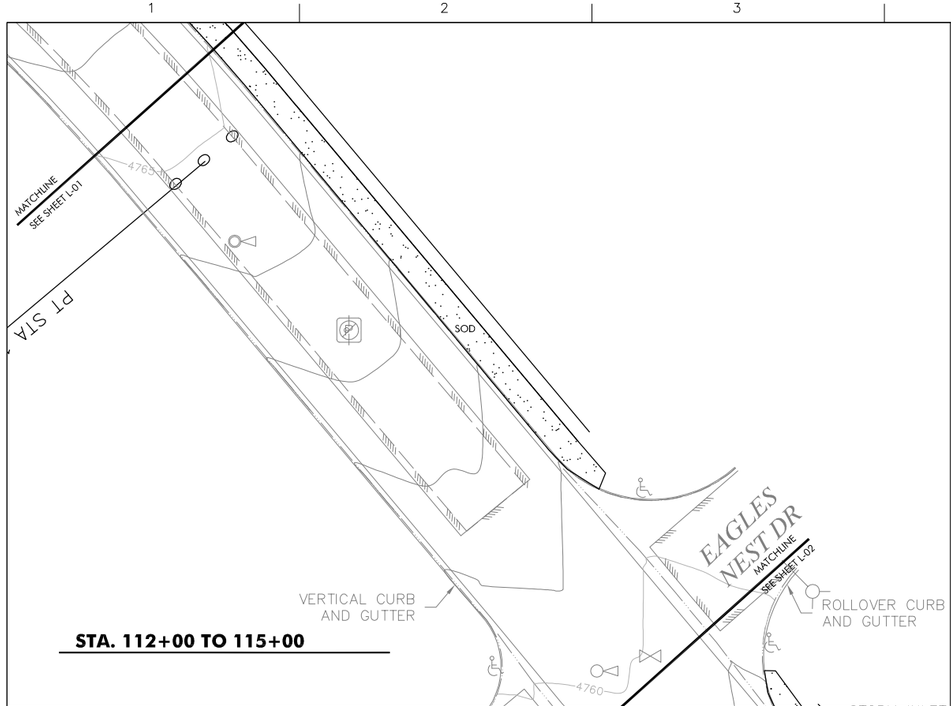

STA. 112+00 TO 115+00

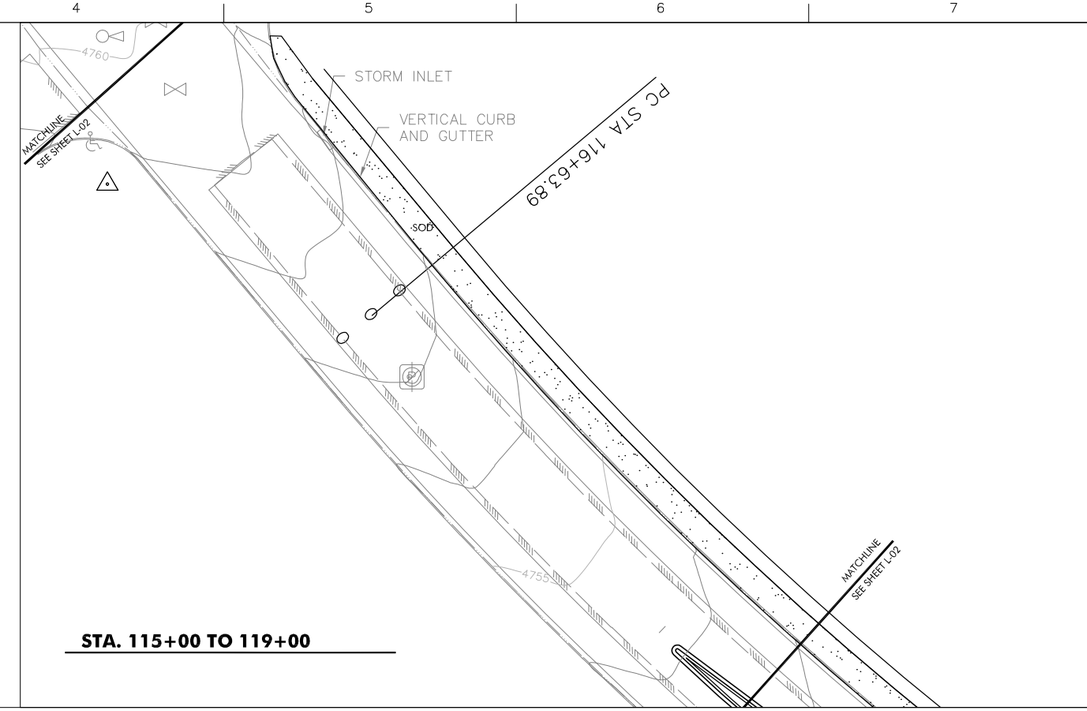

STA. 115+00 TO 119+00

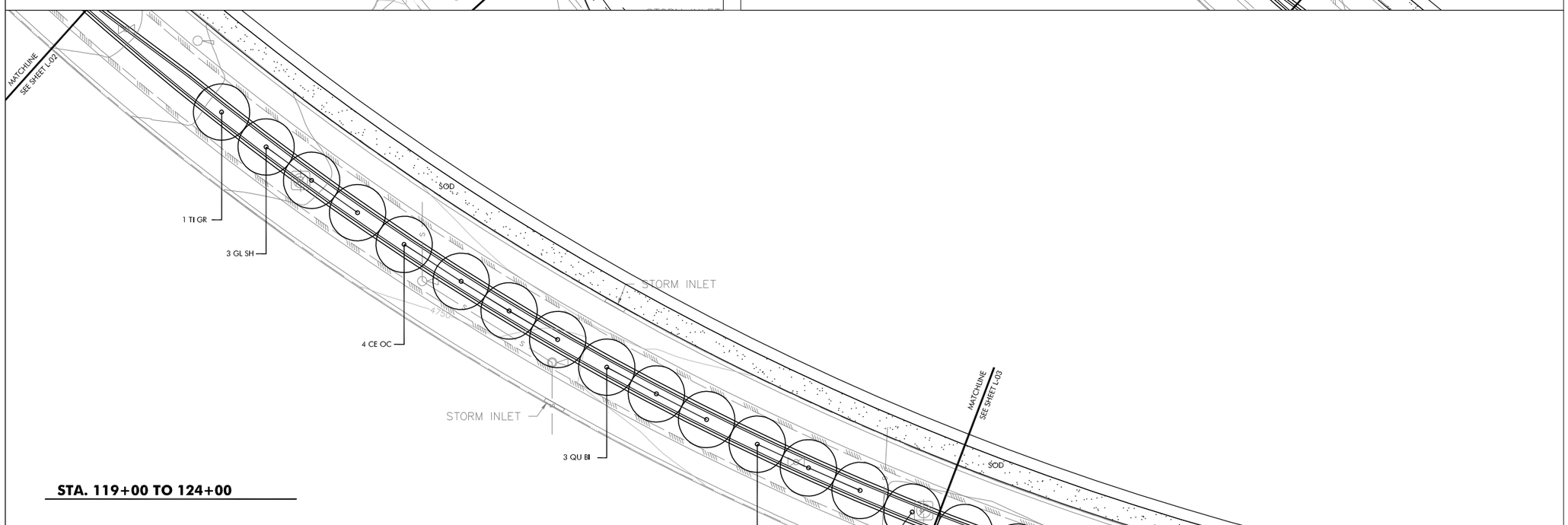

STA. 119+00 TO 124+00

CALL UTILITY NOTIFICATION
CENTER OF COLORADO

1-800-922-1987

OR 534-6700 IN METRO DENVER

CALL 2 BUSINESS DAYS IN ADVANCE
BEFORE YOU DIG, GRADE, OR EXCAVATE
FOR THE MARKING OF UNDERGROUND
MEMBER UTILITIES

BHA Design Incorporated
4803 Innovation Drive
Fort Collins, Colorado 80525
voice: 970.223.7577
fax: 970.223.1827

HDR Engineering, Inc.

ISSUE	DATE	DESCRIPTION
4	2/22/08	100% FINAL DESIGN
3	1/15/08	100% DESIGN REVIEW SUBMITTAL
2	7/13/07	90% DESIGN REVIEW SUBMITTAL
1	4/27/07	30% PRILIMINARY DESIGN

PROJECT MANAGER	ANGELA MILEWSKI
PROJECT NUMBER	000000000055451

Prairie View Drive

The City of Evans COLORADO

PLANTING PLAN

0 30' 60'

FILENAME	7015-P-PLAN.DWG
SCALE	1' = 30'-0"

SHEET L-02

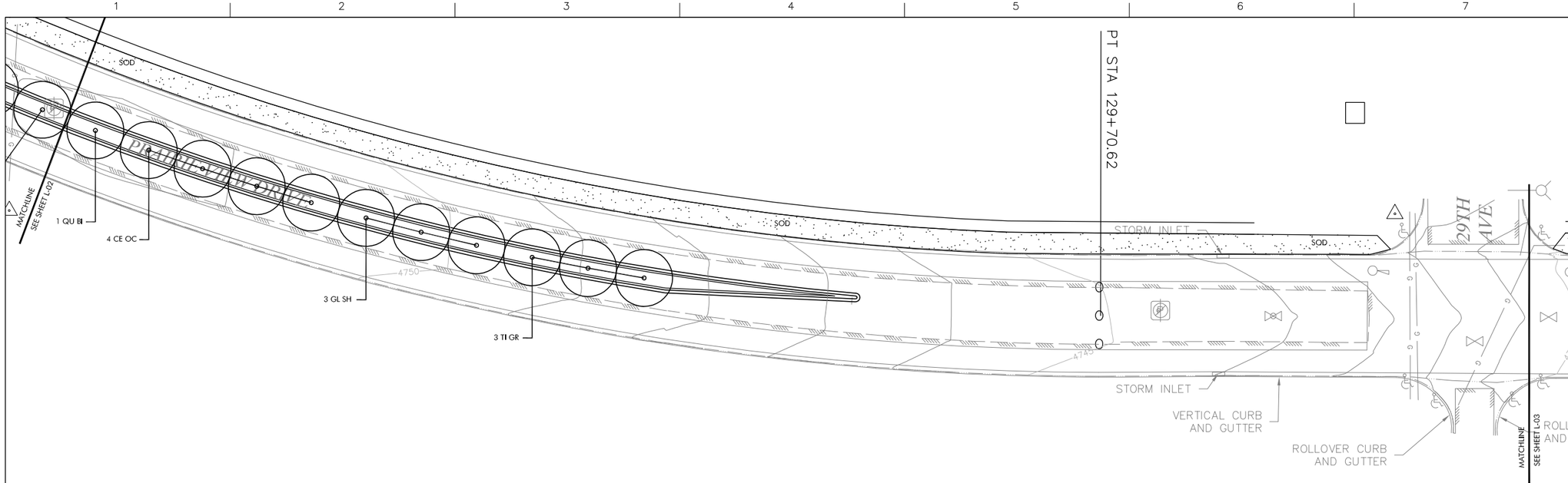

STA. 124+00 TO 132+00

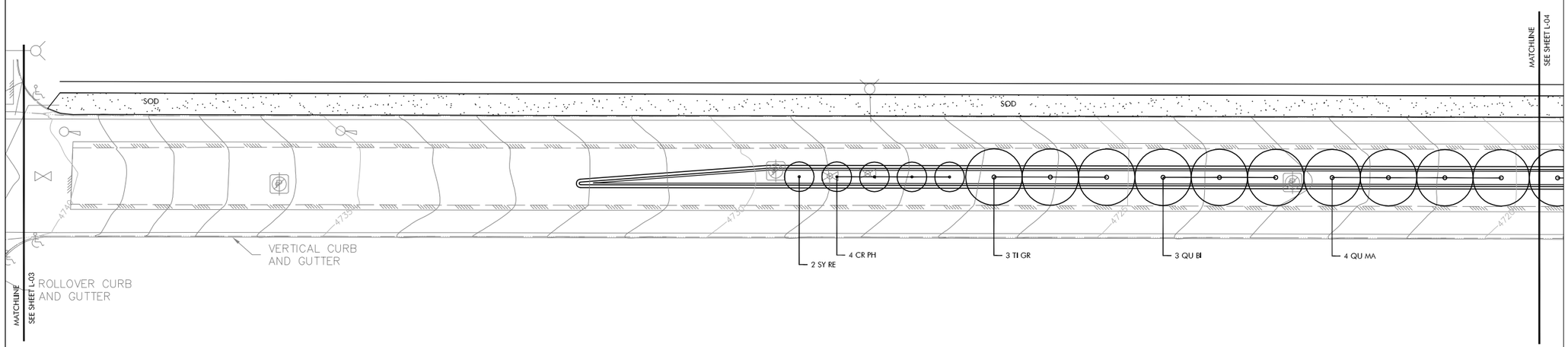

STA. 132+00 TO 140+00

CALL UTILITY NOTIFICATION
CENTER OF COLORADO

1-800-922-1987

OR 534-6700 IN METRO DENVER

CALL 2 BUSINESS DAYS IN ADVANCE
BEFORE YOU DIG, GRADE, OR EXCAVATE
FOR THE MARKING OF UNDERGROUND
MEMBER UTILITIES

bha
BHA Design Incorporated
4803 Innovation Drive
Fort Collins, Colorado 80525
voice: 970.223.7577
fax: 970.223.1827

HDR
HDR Engineering, Inc.

ISSUE	DATE	DESCRIPTION
4	2/22/08	100% FINAL DESIGN
3	1/15/08	100% DESIGN REVIEW SUBMITTAL
2	7/13/07	90% DESIGN REVIEW SUBMITTAL
1	4/27/07	30% PRILIMINARY DESIGN

PROJECT MANAGER: ANGELA MILEWSKI

PROJECT NUMBER: 000000000055451

Prairie View Drive

The City of Evans COLORADO

PLANTING PLAN

0 30' 60'

FILENAME: 7015-P-PLAN.DWG

SCALE: 1" = 30'-0"

SHEET: **L-03**

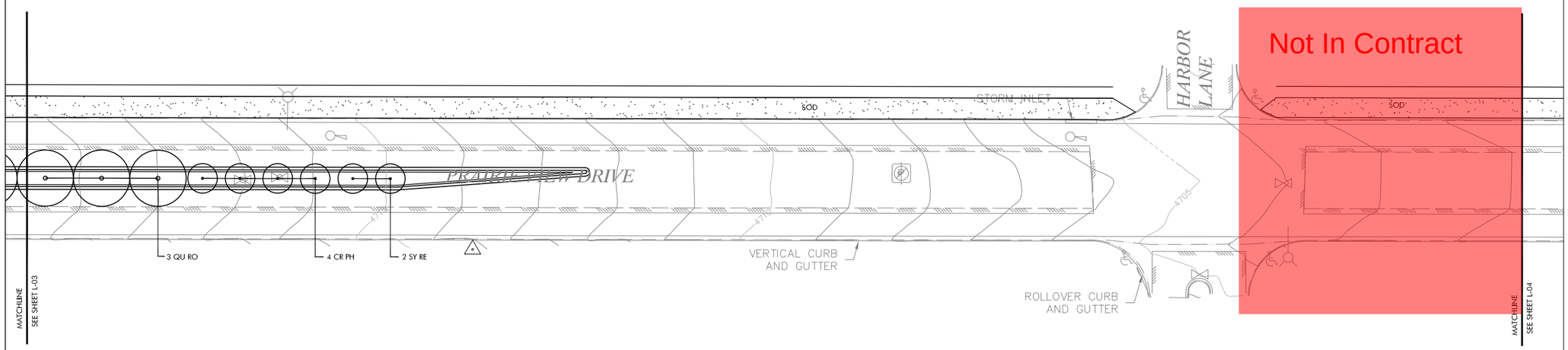

STA. 140+00 TO 148+00

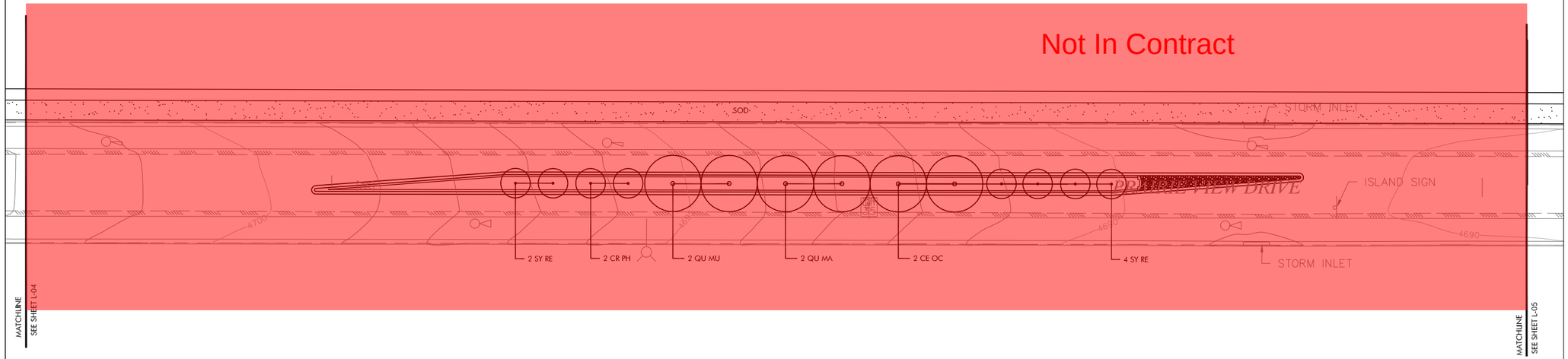

STA. 148+00 TO 156+40

CALL UTILITY NOTIFICATION CENTER OF COLORADO

1-800-922-1987

OR 534-6700 IN METRO DENVER

CALL 2 BUSINESS DAYS IN ADVANCE BEFORE YOU DIG, GRADE, OR EXCAVATE FOR THE MARKING OF UNDERGROUND MEMBER UTILITIES

bha

BHA Design Incorporated
4803 Innovation Drive
Fort Collins, Colorado 80525
voice: 970.223.7577
fax: 970.223.1827

HDR

HDR Engineering, Inc.

ISSUE	DATE	DESCRIPTION
4	2/22/08	100% FINAL DESIGN
3	1/15/08	100% DESIGN REVIEW SUBMITTAL
2	7/13/07	90% DESIGN REVIEW SUBMITTAL
1	4/27/07	30% PRILIMINARY DESIGN

PROJECT MANAGER	ANGELA MILEWSKI
PROJECT NUMBER	000000000055451

Prairie View Drive

The City of Evans COLORADO

PLANTING PLAN

0 30' 60'

FILENAME	7015-P-PLAN.DWG
SCALE	1' = 30'-0"

SHEET **L-04**

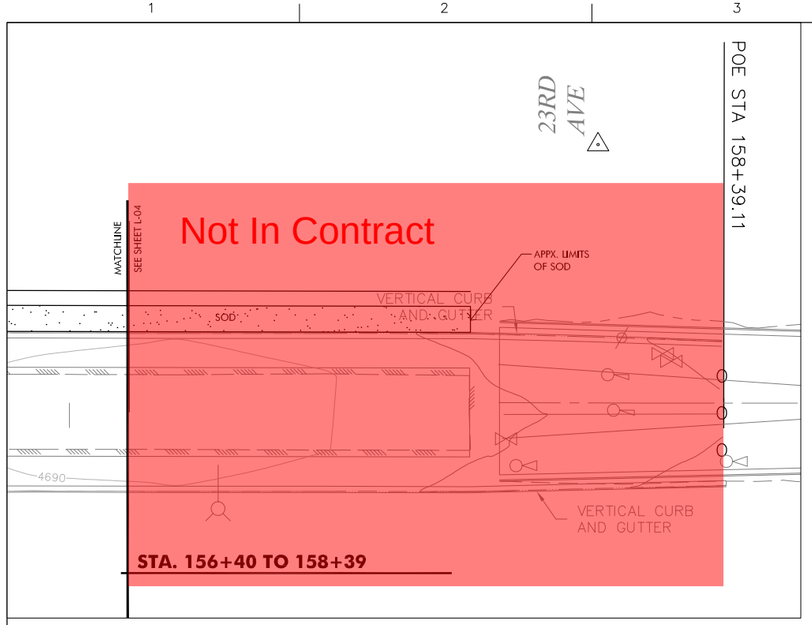

PLANT LIST

Key	Botanical name	Common Name	Size	Root	Spacing	Quantity
DECIDUOUS TREES						
CE OC	Celtic occidentalis	Western Hackberry	2.5" Caliper	BB	See plan	10
CR PH	Crataegus phaenopyrum	Washington Hawthorne	2.5" Caliper	BB	See plan	10
GL SH	Gleditsia triacanthos inermis 'Shademaster'	Shademaster Honeylocust	2.5" Caliper	BB	See plan	10
QU BI	Quercus bicolor	Swamp White Oak	2.5" Caliper	BB	See plan	8
QU MA	Quercus macrocarpa	Burr Oak	2.5" Caliper	BB	See plan	12
QU MU	Quercus muehlenbergii	Chinkapin Oak	2.5" Caliper	BB	See plan	8
QU RO	Quercus robur	English Oak	2.5" Caliper	BB	See plan	9
SY RE	Syringa reticulata	Japanese Tree Lilac	2.5" Caliper	BB	See plan	9
TI GR	Tilia cordata 'Greenspire'	Greenspire Linden	2.5" Caliper	BB	See plan	10

SOD

Turfgrass species shall consist of a minimum of three cultivars of Kentucky Bluegrass (Poa pratensis). Sod of grass shall have no less than 95 percent germination, no less than 85 percent pure seed, and not more than 0.5 percent weed seed.

DRYLAND GRASS MIX

Low grow seed mix must be applied with a grass seed drill at a rate of 22 lbs. PLS per acre using the following species: 60% Buffalograss and 40% Blue Gramma. Grass seed shall be planted with a grass seed drill (not a grain drill) at a depth of ½" to ¾". Broadcast seeding of grass seed is not acceptable. Straw mulch shall be spread and crimped into the soil at a rate of 4,000 lbs/acre. Hydroseeding and hydromulching is acceptable in lieu of drill seeding and crimping of mulch straw, only in areas that are inaccessable to landscaping equipment, and must be approved by the city of Evans prior to use.

PLANT NOTES

1. All areas to be disturbed by construction shall be regraded and seeded with the above stated Dryland Grass Mixture.
2. Deciduous trees shall be single-stem trees with straight trunk, well balanced crown, and intact leader, of height and caliper indicated, complying with ANSI Z60.1 for type of trees required. Trees shall be balled and burlapped with branching height one-third to one-half of tree height.
3. Ornamental deciduous trees shall be branched or pruned naturally according to species and type, with relationship of caliper, height, and branching according to ANSI Z60.1. Stem form shall be single trunk and all trees shall be balled and burlapped.
4. Grade planting beds to a smooth, uniform surface plane with loose, uniformly fine texture. Roll and rake, remove ridges, and fill depressions to meet finished grades.
5. Median areas
   1. All median planting areas and turf areas shall be amended with Type 1 compost at a rate of 4 cubic yards per 1,000 s.f. Soil amendment shall be incorporated evenly into the top 6 inches of soil.
   2. Median areas shall be mulched with 4 inch deep shredded cedar mulch.
6. Inspections
   A. Site Inspection
      1. Contractor will inspect existing site conditions and note irregularities affecting the work of this section. Verify that grading operations have been satisfactorily completed and that topsoil of adequate quantity and quality has been placed in areas as specified. Verify that the areas to be revegetated are protected from concentrated runoff and sediment from adjacent areas. Note previous treatments to the areas such as temporary seeding or mulching and discuss with the Owner's Representative how these treatments will affect permanent revegetation. Report irregularities affecting work of this section to the Owner's Representative before initiating work. When the Contractor begins work under this section, it implies acceptance of existing conditions.
      2. Contractor shall notify Owner's Representative prior to start of work. Owner's Representative will be responsible to monitor the work.
   B. Pre-planting Inspections:
      1. Plant material shall be inspected by an Owner's Representative before planting. Inspection of materials may be sequenced by major planting areas to accomodate efficient planting operations. Plants for inspection must be in a single location preferably on the project site. Rejected materials must be removed from the site, replaced and reinspected before planting. If the supplier is a local nursery, tagged plants may be inspected at the nursery. Photographs of the plant materials to be obtained from non-local sources may be submitted to the Onwer's Representative for preliminary inspection. This preliminary inspection is subject to final approval of plants at the job site. The Owner reserves the right to reject plant material at any stage of construction or warranty period.
      2. Soil amendments, backfill mixes and mulches will be inspected at the site by the Owner's Representative before they are used in planting operations.
      3. Obtain Owner's Representatives review of staked locations of trees before digging for those plants occurs. Obtain Owner's Representatives review of the location of shrubs in their containers at the proposed locations before digging commences. Contact Owner's Representative at least two days in advance.
   C. Substantial Completion Inspection:
      1. As soon as all planting is completed, a review and preliminary inspection to determine the condition of the vegetation will be held by the Owner's Representatives upon request by the Contractor.
      2. The inspection will occur only after the following conditions have been met:
         a. Landscape areas will be free of weeds and neatly cultivated;
         b. Plant basins shall be in good repair;
         c. Irrigation systems shall be fully operational with heads properly adjusted;
         d. Debris and litter shall be cleaned up and walkways and curbs shall be cleaned of soil and debris left from planting operations.
      3. If, after the inspection, the Owner's Representative is of the opinion that the work has been performed as per the Contract Documents, and that the vegetation is in satisfactory growing condition, he will give the Contractor Written Notice of Acceptance and the warranty period shall begin.
      4. Work requiring corrective action in the judgment of the Owner's Representative shall be performed within the first ten (10) days of the warranty period. Any work not performed within this time will require an equivalent extension of the warranty period. Corrective work and materials replacement shall be in accordance with the Contract documents, and shall be made by the Contractor at no cost to the Owner.
      5. On occasion cold weather may preclude the opportunity to replace dead plants, or the contractor may request replacement to be delayed to the following spring. The Owner's Representative may grant this extension. In the event an extension is granted, the replacement plants shall be installed no later than May 15th, and the warranty shall be extended to November 15th of the same year (one growing season).
      6. Final approval and Substantial Completion notice will be given when all deficiencies are corrected.
7. Warranty
   A. Special Warranty: Installer's standard form in which Installer agrees to repair or replace plantings and accessories that fail in materials, workmanship, or growth within specified warranty period.
      1. Failures include, but are not limited to, the following:
         a. Death and unsatisfactory growth, except for defects resulting from lack of adequate maintenance, neglect, abuse by Owner, or incidents that are beyond Contractor's control.
         b. Structural failures including plantings falling or blowing over.
         c. Faulty operation of tree stabilization.
         d. Deterioration of metals, metal finishes, and other materials beyond normal weathering.
      2. Warranty Periods from Date of Substantial Completion:
         a. Trees and Shrubs: One year.
      3. Include the following remedial actions as a minimum:
         a. Remove dead exterior plants immediately. Replace immediately unless required to plant in the succeeding planting season.
         b. Replace exterior plants that are more than 25 percent dead or in an unhealthy condition at end of warranty period.
         c. Provide extended warranty for replaced plant materials; warranty period equal to original warranty period.
8. Maintenance Service
   A. Initial Maintenance Service for Exterior Plants: Provide full maintenance by skilled employees of landscape Installer. Begin maintenance immediately after each area is planted and continue until plantings are acceptably healthy and well established, but for not less than 12 months from date of Substantial Completion.
9. Tree and shrub maintenance
   A. Maintain plantings by pruning, cultivating, watering, weeding, fertilizing, restoring planting saucers, adjusting and repairing stakes and guy supports, and resetting to proper grades or vertical position, as required to establish healthy, viable plantings. Spray or treat as required to keep trees and shrubs free of insects and disease. Restore or replace damaged tree wrappings.
10. Lawn Maintenance
   A. Maintain and establish lawn by watering, fertilizing, weeding, mowing, trimming, replanting, and other operations. Roll, regrade, and replant bare or eroded areas and remulch to produce a uniformly smooth lawn. Provide materials and installation the same as those used in the original installation. In areas where mulch has been disturbed by wind or maintenance operations, add new mulch and anchor as required to prevent displacement.
   B. Watering
      1. Provide and maintain temporary piping, hoses, and lawn-watering equipment to convey water from sources and to keep lawn uniformly moist to a depth of 4 inches.
      2. Schedule watering to prevent wilting, puddling, erosion, and displacement of seed or mulch. Lay out temporary watering system to avoid walking over muddy or newly planted areas.
      3. Water lawn with fine spray at a minimum rate of 1 inch per week unless rainfall precipitation is adequate.
   C. Mow lawn as soon as top growth is tall enough to cut. Repeat mowing to maintain specified height without cutting more than ⅓ of grass height. Remove no more than ⅓ of grass-leaf growth in initial or subsequent mowings. Do not delay mowing until grass blades bend over and become matted. Do not mow when grass is wet. Schedule initial and subsequent mowings to maintain a 2-3 inch grass height.
   D. Lawn Postfertilization
      1. Apply fertilizer after initial mowing and when grass is dry.

GENERAL NOTES

1. STAKE DECIDUOUS TREES UP TO AND INCLUDING 2 1/2" CAL. DO NOT STAKE CONIFERS.
2. REMOVE STAKING AT THE END OF THE FIRST GROWING SEASON AFTER PLANTING.
3. TREE STAKES TO BE DRIVEN OUTSIDE OF ROOT BALL.
4. TREES WHOSE NORTH ORIENTATION IS NOT CHANGED FROM THE NURSERY DO NOT NEED TO BE WRAPPED, EXCEPT TREES WITH VERY THIN BARK.
5. OVER EXCAVATE PLANTING PIT TO 2 TIMES THE DIAMETER OF THE ROOTBALL.

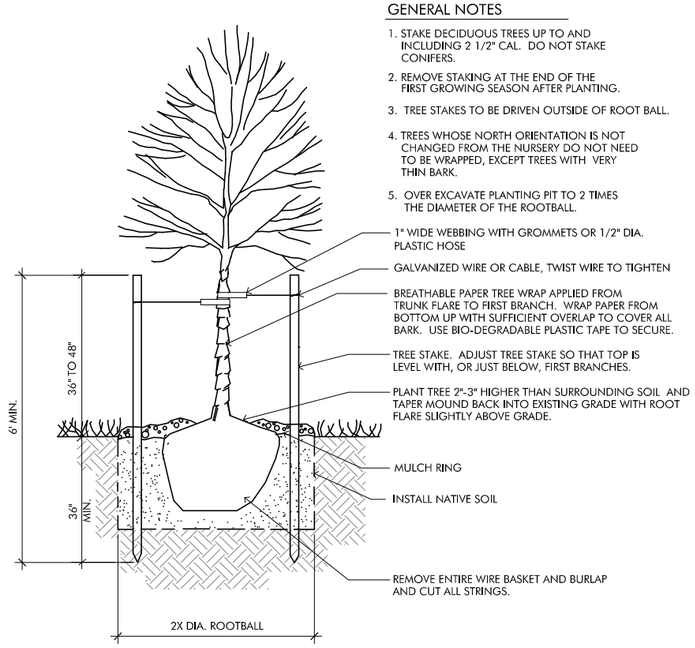

1 L-05 **TREE STAKE DETAIL**
Scale: N.T.S.

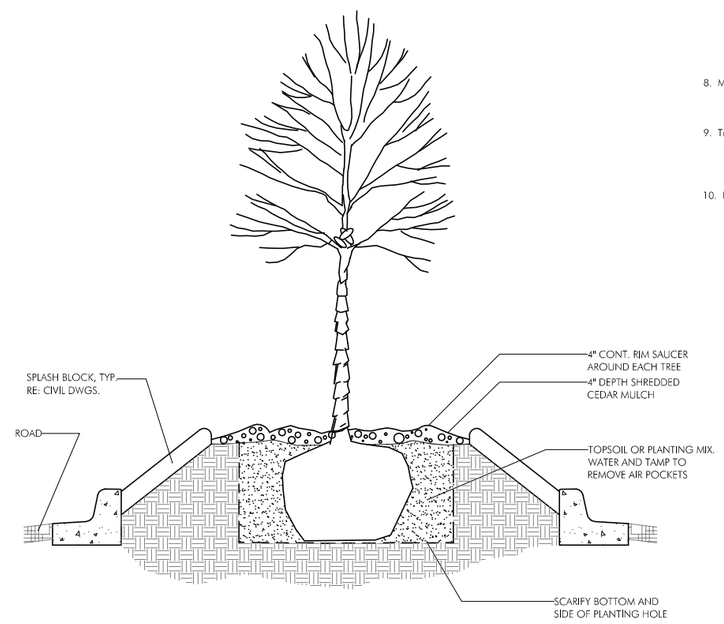

2 L-05 **MEDIAN TREE PLANTING DETAIL**
Scale: N.T.S.

CALL UTILITY NOTIFICATION CENTER OF COLORADO
1-800-922-1987
OR 534-6700 IN METRO DENVER
CALL 2 BUSINESS DAYS IN ADVANCE BEFORE YOU DIG, GRADE, OR EXCAVATE FOR THE MARKING OF UNDERGROUND MEMBER UTILITIES

BHA Design Incorporated
4803 Innovation Drive
Fort Collins, Colorado 80525
voice: 970.223.7577
fax: 970.223.1827

HDR Engineering, Inc.

ISSUE	DATE	DESCRIPTION
4	2/22/08	100% FINAL DESIGN
3	1/15/08	100% DESIGN REVIEW SUBMITTAL
2	7/13/07	90% DESIGN REVIEW SUBMITTAL
1	4/27/07	30% PRILIMINARY DESIGN

PROJECT MANAGER	ANGELA MILEWSKI
PROJECT NUMBER	000000000055451

Prairie View Drive

The City of Evans COLORADO

PLANTING PLAN AND DETAILS

0 30' 60'

FILENAME	7015-P-PLAN.DWG
SCALE	1' = 30'-0"
SHEET	L-05

GENERAL DESCRIPTION

A FULLY AUTOMATED SPRINKLER AND DRIP IRRIGATION SYSTEM WILL IRRIGATE TURF AREAS AND TREES. POP-UP SPRAY SPRINKLERS WILL IRRIGATE TURF. INLINE DRIP TUBING WILL IRRIGATE TREES IN MEDIANS.

NON-POTABLE WATER WILL BE USED FOR IRRIGATION WITH A POTABLE WATER BACKUP SYSTEM. THE POINT-OF-CONNECTION (P.O.C.) WILL BE AS SHOWN ON THE IRRIGATION PLANS.

A WALL MOUNT IRRIGATION CONTROLLER COMPATIBLE WITH THE CITY OF EVANS EXISTING CENTRAL CONTROL SYSTEM WILL BE INSTALLED UNDER THIS CONTRACT. THE CONTROLLER WILL UTILIZE A RAIN SENSOR TO FACILITATE THE INTERRUPTION OF IRRIGATION AT SPECIFIED RAINFALL THRESHOLD. A FLOW SENSOR AND MASTER VALVE WILL BE UTILIZED TO FACILITATE AUTOMATIC SHUT DOWN OF THE IRRIGATION SYSTEM IN THE EVENT OF A MAINLINE PIPE BREAK.

ISOLATION GATE VALVES PERMIT THE ISOLATION OF SECTIONS OF THE SYSTEM FOR REPAIRS OR MAINTENANCE. QUICK COUPLING VALVES HAVE BEEN PROVIDED THROUGHOUT THE SITE FOR INCIDENTAL WATERING.

PROVISIONS HAVE BEEN MADE FOR FUTURE ANTICIPATED IRRIGATION NEEDS.

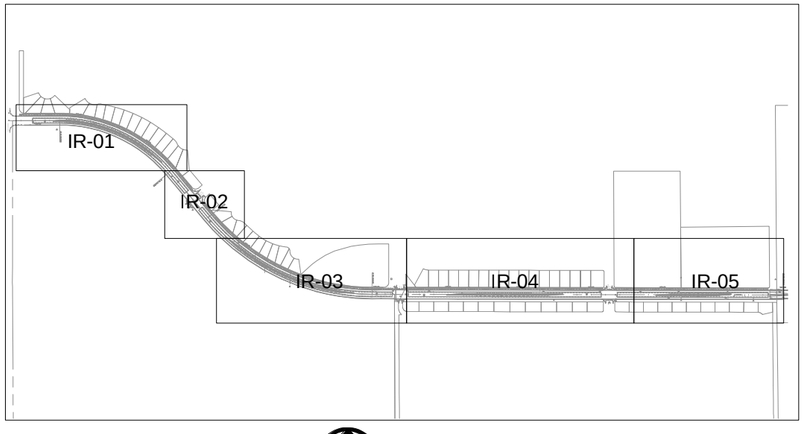

KEYMAP
N.T.S.

NORTH

GENERAL NOTES

1. THE SYSTEM DESIGN ASSUMES A MINIMUM DYNAMIC PRESSURE AND DISCHARGE FOR THE IRRIGATION SYSTEM AT EACH POINT-OF-CONNECTION INDICATED ON THE PLANS. VERIFY PRESSURE AND FLOW ON SITE PRIOR TO CONSTRUCTION AND REPORT ANY DISCREPANCIES WITH THE ASSUMPTIONS

2. READ THOROUGHLY AND BECOME FAMILIAR WITH THE SPECIFICATIONS AND INSTALLATION DETAILS FOR THIS AND RELATED WORK PRIOR TO CONSTRUCTION.

3. COORDINATE UTILITY LOCATES ("CALL BEFORE YOU DIG") OF UNDERGROUND UTILITIES PRIOR TO CONSTRUCTION.

4. DO NOT PROCEED WITH THE INSTALLATION OF THE IRRIGATION SYSTEM WHEN IT IS OBVIOUS IN THE FIELD THAT OBSTRUCTIONS OR GRADE DIFFERENCES EXIST THAT MIGHT NOT HAVE BEEN CONSIDERED IN THE ENGINEERING, OR IF DISCREPANCIES IN CONSTRUCTION DETAILS, LEGEND, NOTES, OR SPECIFICATIONS ARE DISCOVERED. BRING ALL SUCH OBSTRUCTIONS OR DISCREPANCIES TO THE ATTENTION OF THE ENGINEER.

5. THE DRAWINGS ARE DIAGRAMMATIC. THEREFORE, THE FOLLOWING SHOULD BE NOTED:

   A. IRRIGATION COMPONENTS MAY BE SHOWN OUTSIDE PLANTING AREAS FOR CLARITY. AVOID CONFLICTS BETWEEN THE IRRIGATION SYSTEM, PLANTING MATERIALS, AND ARCHITECTURAL FEATURES. INSTALL IRRIGATION PIPE AND WIRING IN LANDSCAPED AREAS WHENEVER POSSIBLE.

   B. USE ONLY STANDARD TEES AND ELBOW FITTINGS. USE OF CROSS TYPE FITTINGS IS NOT PERMITTED.

6. PROVIDE THE FOLLOWING COMPONENTS TO THE OWNER PRIOR TO THE COMPLETION OF THE PROJECT:

   A. TWO OPERATING KEYS FOR EACH TYPE OF MANUALLY OPERATED VALVE.
   B. TWO OF EACH SERVICING WRENCH OR TOOL NEEDED FOR COMPLETE ACCESS, ADJUSTMENT, AND REPAIR OF ALL ROTARY SPRINKLERS.

7. SELECT NOZZLES FOR SPRAY SPRINKLERS WITH ARCS THAT PROVIDE COMPLETE AND ADEQUATE COVERAGE WITH MINIMUM OVERSPRAY FOR THE SITE CONDITIONS.

8. THE IRRIGATION CONTRACTOR IS RESPONSIBLE FOR THE INSTALLATION OF IRRIGATION SLEEVING. SLEEVES ARE TO BE INSTALLED FOR BOTH PIPING AND ELECTRICAL WIRING AT EACH HARDSCAPE CROSSING. COORDINATE INSTALLATION OF SLEEVING WITH OTHER TRADES. ANY PIPE OR WIRE WHICH PASSES BENEATH EXISTING HARDSCAPE WHERE SLEEVING WAS NOT INSTALLED, REQUIRES HORIZONTAL BORING BY THE IRRIGATION CONTRACTOR.

9. CONNECT ELECTRICAL POWER TO THE IRRIGATION CONTROL SYSTEM IN ACCORDANCE WITH THE NATIONAL ELECTRIC CODE AND ALL APPLICABLE LOCAL ELECTRIC UTILITY CODES.

10. WITH REGARD TO PIPE SIZING, THE FOLLOWING SHOULD BE NOTED:

    IF A SECTION OF UNSIZED PIPE IS LOCATED BETWEEN TWO IDENTICALLY SIZED SECTIONS, THE UNSIZED PIPE IS THE SAME NOMINAL SIZE AS THE TWO SIZED SECTIONS. THE UNSIZED PIPE SHOULD NOT BE CONFUSED WITH THE DEFAULT PIPE SIZE NOTED IN THE LEGEND.

11. INSTALL VAN NOZZLES WHERE SPRAY ANGLES ARE LESS OR GREATER THAN WHAT A FIXED SPRAY NOZZLE CAN IRRIGATE WITHOUT EXCESSIVE OVERSPRAY.

Aqua Engineering, Inc.
Innovative Water Solutions
4803 Innovation Drive
Fort Collins, Colorado 80525
Phone (970) 229-9668
FAX (970) 226-3855

CALL UTILITY NOTIFICATION CENTER OF COLORADO

1-800-922-1987

OR 534-6700 IN METRO DENVER

CALL 2 BUSINESS DAYS IN ADVANCE BEFORE YOU DIG, GRADE, OR EXCAVATE FOR THE MARKING OF UNDERGROUND MEMBER UTILITIES

BHA Design Incorporated
4803 Innovation Drive
Fort Collins, Colorado 80525
voice: 970.223.7577
fax: 970.223.1827

HDR Engineering, Inc.

ISSUE	DATE	DESCRIPTION
3	2/22/08	100% FINAL DESIGN
2	1/15/08	100% DESIGN REVIEW SUBMITTAL
1	12/20/07	90% SUBMITTAL

PROJECT MANAGER	CBK
PROJECT NUMBER	000000000058704

Prairie View Drive

The City of Evans Colorado

IRRIGATION COVER SHEET

FILENAME	P-Prairie.DWG
SCALE	NTS

SHEET **IR-00A**

LEGEND

- SLEEVING: PER SPECIFICATIONS
- MAINLINE PIPE: CLASS 200 PVC PIPE (SIZE AS SHOWN)
- C900 SDR14 PVC PIPE (SIZE AS SHOWN)
- BACKFLUSH PIPE
- LATERAL PIPE TO SPRINKLERS OR DRIP: CLASS 160 PVC PIPE (1-INCH SIZE UNLESS OTHERWISE INDICATED)
- UNCONNECTED PIPE CROSSING
- (N) NON-POTABLE WATER METER ASSEMBLY
- (P) POTABLE WATER METER ASSEMBLY
- [W] IRRIGATION WATER CONNECTION ASSEMBLY
- POINT-OF-CONNECTION (P.O.C.)
- CAPPED MAINLINE FOR FUTURE USE
- WINTERIZATION ASSEMBLY
- [M] MASTER VALVE ASSEMBLY
- [F] FLOW SENSOR ASSEMBLY
- ISOLATION GATE VALVE ASSEMBLY
- [Q] QUICK COUPLING VALVE ASSEMBLY
- REMOTE CONTROL VALVE ASSEMBLY
- [S] SWING CHECK VALVE ASSEMBLY
- POP-UP SPRAY SPRINKLER: RAIN BIRD 1800-SAM-PRS W/ 5 SERIES NOZZLE
  PRESSURE: 30 PSI RADIUS: 5 FEET (SEE DETAILS FOR POP-UP HEIGHT)
  FLOW (GPM): Q - 0.10 H - 0.20 F - 0.40
- POP-UP SPRAY SPRINKLER: RAIN BIRD 1800-SAM-PRS W/ 8 SERIES NOZZLE
  PRESSURE: 30 PSI RADIUS: 8 FEET (SEE DETAILS FOR POP-UP HEIGHT)
  FLOW (GPM): Q - 0.26 H - 0.52 F - 1.05
- POP-UP SPRAY SPRINKLER: RAIN BIRD 1800-SAM-PRS W/ 10 SERIES NOZZLE
  PRESSURE: 30 PSI RADIUS: 10 FEET (SEE DETAILS FOR POP-UP HEIGHT)
  FLOW (GPM): Q - 0.39 H - 0.79 F - 1.57
- POP-UP SPRAY SPRINKLER: RAIN BIRD 1800-SAM-PRS W/ 12 SERIES NOZZLE
  PRESSURE: 30 PSI RADIUS: 12 FEET (SEE DETAILS FOR POP-UP HEIGHT)
  FLOW (GPM): Q - 0.65 H - 1.30 F - 2.60
- POP-UP SPRAY SPRINKLER: RAIN BIRD 1800-SAM-PRS W/ 15 SERIES NOZZLE
  PRESSURE: 30 PSI RADIUS: 15 FEET (SEE DETAILS FOR POP-UP HEIGHT)
  FLOW (GPM): Q - 0.93 H - 1.85 F - 3.70
- DRIP REMOTE CONTROL VALVE ASSEMBLY
- [D] INLINE DRIP TREE RING ASSEMBLY
- [C] INLINE DRIP FLUSH VALVE ASSEMBLY
- (1) IRRIGATION CONTROLLER UNIT
  CONTROLLER 1: REFER TO SPECIFICATIONS, 40 STATIONS AVAILABLE, 29 STATIONS USED
- [R] RAIN SENSOR ASSEMBLY

1-1	INDICATES CONTROLLER AND CONTROLLER STATION NUMBER
33	INDICATES LATERAL DISCHARGE IN GPM
1-1/2"	INDICATES REMOTE CONTROL VALVE SIZE IN INCHES
-	

FLAG NOTES

1. INSTALL A POTABLE WATER METER ASSEMBLY IN THE APPROXIMATE LOCATION SHOWN. COORDINATE INSTALLATION OF THE CURB STOP VALVE, SERVICE LINE, AND POTABLE WATER METER ASSEMBLY WITH THE CITY OF EVANS. COORDINATE EXACT PLACEMENT OF POTABLE WATER METER ASSEMBLY WITH THE OWNER'S REPRESENTATIVE ON SITE PRIOR TO CONSTRUCTION.
2. EXCAVATE AND EXPOSE EXISTING 4-INCH C900 PVC NON-POTABLE IRRIGATION MAINLINE STUB-OUT AT THE APPROXIMATE LOCATION SHOWN. EXTEND C900 IRRIGATION MAINLINE PIPE TO THE NON-POTABLE WATER METER ASSEMBLY. COORDINATE EXACT LOCATION OF THE EXISTING NON-POTABLE STUB-OUT WITH THE OWNER'S REPRESENTATIVE ON SITE PRIOR TO CONSTRUCTION.
3. INSTALL NON-POTABLE WATER METER ASSEMBLY IN THE APPROXIMATE LOCATION SHOWN. COORDINATE EXACT LOCATION OF THE NON-POTABLE WATER METER ASSEMBLY WITH THE OWNER'S REPRESENTATIVE ON SITE PRIOR TO CONSTRUCTION.
4. INSTALL THE IRRIGATION WATER CONNECTION ASSEMBLY IN THE APPROXIMATE LOCATION SHOWN. COORDINATE THE EXACT LOCATION OF THE IRRIGATION WATER CONNECTION ASSEMBLY WITH THE OWNER'S REPRESENTATIVE ON SITE PRIOR TO CONSTRUCTION.
5. INSTALL WALL MOUNT IRRIGATION CONTROLLER INSIDE THE IRRIGATION WATER CONNECTION ASSEMBLY ENCLOSURE. ELECTRICAL POWER WILL BE PROVIDED TO WITHIN 5-FEET OF CONTROLLER LOCATION. COORDINATE EXACT LOCATION OF ELECTRICAL POWER WITH THE ELECTRICAL DRAWINGS AND NECESSARY TRADES ON SITE. PROVIDE ALL NECESSARY CONDUIT AND CONDUCTORS BETWEEN ELECTRICAL POWER SOURCE AND IRRIGATION CONTROLLER. MAKE ALL NECESSARY CONNECTIONS. COORDINATE EXACT PLACEMENT OF CONTROLLER WITH THE OWNER'S REPRESENTATIVE ON SITE PRIOR TO CONSTRUCTION.
6. INSTALL RAIN SENSOR ON IRRIGATION WATER CONNECTION ASSEMBLY ENCLOSURE EXTERIOR AND ROUTE ABOVE GRADE RAIN SENSOR WIRING WITHIN ELECTRICAL CONDUIT. ROUTE RAIN SENSOR WIRING TO THE IRRIGATION CONTROLLER AND CONNECT THE RAIN SENSOR WIRING TO THE IRRIGATION CONTROLLER PER MANUFACTURER'S GUIDELINES. COORDINATE EXACT RAIN SENSOR PLACEMENT ON THE ENCLOSURE WITH OWNER'S REPRESENTATIVE ON SITE PRIOR TO CONSTRUCTION.
7. FOR FUTURE USE: INSTALL DRIP REMOTE CONTROL VALVE ASSEMBLY PER THE IRRIGATION DETAILS IN THE APPROXIMATE LOCATION SHOWN. EXTEND 3-FEET OF LATERAL PIPE FROM THE ASSEMBLY AND CAP THE END OF THE LATERAL PIPE WITH A SOLVENT WELD SCH. 40 PVC CAP. INSTALL A 10-INCH ROUND VALVE BOX ABOVE THE CAPPED LATERAL PIPE. COORDINATE EXACT PLACEMENT OF THE DRIP REMOTE CONTROL VALVE ASSEMBLY WITH THE OWNER'S REPRESENTATIVE ON SITE PRIOR TO CONSTRUCTION.
8. INSTALL A 14-INCH SLEEVE UNDER EXISTING ROADWAY. EMPLOY HORIZONTAL BORING TECHNIQUES TO INSTALL THE SLEEVE. INSTALL CASING SPACERS AND JOINT RESTRAINTS ON THE PVC PIPE ROUTED WITHIN SLEEVE PER PIPE MANUFACTURER'S RECOMMENDATIONS. REPAIR ANY DAMAGE TO THE WALK AFTER BORING AND SLEEVING ACTIVITIES. COORDINATE SLEEVE INSTALLATION WITH THE OWNER'S REPRESENTATIVE ON SITE PRIOR TO CONSTRUCTION.
9. INSTALL ONE 6-INCH AND ONE 4-INCH SLEEVE UNDER EXISTING ROADWAY. THE 6-INCH SLEEVE IS INTENDED FOR MAINLINE AND THE 4-INCH SLEEVE FOR IRRIGATION WIRING. SOLVENT WELD PVC PIPE THAT IS ROUTED WITHIN SLEEVE. EMPLOY HORIZONTAL BORING TECHNIQUES TO INSTALL THE SLEEVES. REPAIR ANY DAMAGE TO THE ROADWAY AFTER BORING AND SLEEVING ACTIVITIES. COORDINATE SLEEVE INSTALLATION WITH THE OWNER'S REPRESENTATIVE ON SITE PRIOR TO CONSTRUCTION.
10. INSTALL TWO AWG #14 CONTROL WIRES AND ONE AWG #12 COMMON WIRE FROM CONTROLLER "1" TO EACH OF THE REMOTE CONTROL VALVE ASSEMBLIES INDICATED FOR USE AS SPARE WIRE IN CASE OF CONTROL WIRE FAILURE. PROVIDE A 3-FOOT COILED LENGTH OF TWO SPARE WIRES IN ALL REMOTE CONTROL VALVE BOXES.
11. FOR FUTURE USE: PROVIDE 13 CONTROL WIRES AND TWO COMMON WIRES FROM CONTROLLER "1" INSIDE A 10-INCH ROUND VALVE BOX LOCATED ADJACENT TO THE CAPPED MAINLINE. COIL 3-FOOT LENGTH OF EACH WIRE INSIDE THE VALVE BOX. 11 CONTROL WIRES AND ONE COMMON WIRE IS INTENDED FOR FUTURE IRRIGATION ALONG 35TH AVENUE. THE REMAINING CONTROL WIRES AND COMMON WIRE ARE INTENDED FOR SPARE WIRING IN CASE OF CONTROL WIRE FAILURE.
12. FOR FUTURE USE: CAP MAINLINE PIPE IN THE APPROXIMATE LOCATION INDICATED. INSTALL AN ISOLATION GATE VALVE ASSEMBLY AT THE END OF THE MAINLINE IN THE APPROXIMATE LOCATION SHOWN. INSTALL A PUSH ON DUCTILE IRON CAP ON THE DISCHARGE SIDE OF THE ISOLATION VALVE AND RESTRAIN THE CAP WITH A THRUST BLOCK. INSTALL A QUICK COUPLING VALVE UPSTREAM OF THE ISOLATION VALVE FOR PROPER WINTERIZATION. COORDINATE EXACT LOCATION OF THE ISOLATION GATE VALVE AND QUICK COUPLER WITH THE OWNER'S REPRESENTATIVE ON SITE PRIOR TO CONSTRUCTION.
13. IRRIGATION PIPE AND VALVES MAY BE SHOWN OUTSIDE OF THE PLANTING AREA IN THE HARDSCAPE FOR CLARITY ONLY. INSTALL ALL IRRIGATION COMPONENTS IN TURF AREA ON THE NORTH SIDE OF PRAIREVIEW DRIVE.
14. FIELD LOCATE EXISTING IRRIGATION MAINLINE PIPE IN THE APPROXIMATE LOCATION SHOWN. EXCAVATE AND EXPOSE EXISTING IRRIGATION MAINLINE PIPE AND WIRING AND INSTALL DRIP REMOTE CONTROL VALVE ASSEMBLY PER THE IRRIGATION DETAILS AND INSTALL NECESSARY REPAIR COUPLINGS. COORDINATE EXACT LOCATION WHERE THE DRIP REMOTE CONTROL VALVE ASSEMBLY IS TO BE INSTALLED WITH THE OWNER'S REPRESENTATIVE ON SITE PRIOR TO CONSTRUCTION.
15. INSTALL A 3-INCH SLEEVE UNDER EXISTING ROADWAY. THE 3-INCH SLEEVE IS INTENDED FOR LATERAL PIPE ROUTING. EMPLOY HORIZONTAL BORING TECHNIQUES TO INSTALL THE SLEEVES. REPAIR ANY DAMAGE TO THE ROADWAY AFTER BORING AND SLEEVING ACTIVITIES. COORDINATE SLEEVE INSTALLATION WITH THE OWNER'S REPRESENTATIVE ON SITE PRIOR TO CONSTRUCTION.
16. FOR FUTURE USE: INSTALL DRIP REMOTE CONTROL VALVE ASSEMBLY PER THE IRRIGATION DETAILS IN THE APPROXIMATE LOCATION SHOWN. FIELD LOCATE EXISTING IRRIGATION MAINLINE PIPE IN THE APPROXIMATE LOCATION SHOWN. EXCAVATE AND EXPOSE EXISTING IRRIGATION MAINLINE PIPE AND WIRING AND INSTALL DRIP REMOTE CONTROL VALVE ASSEMBLY. INSTALL NECESSARY REPAIR COUPLINGS. COORDINATE EXACT LOCATION WHERE THE DRIP REMOTE CONTROL VALVE ASSEMBLY IS TO BE INSTALLED WITH THE OWNER'S REPRESENTATIVE ON SITE PRIOR TO CONSTRUCTION.
17. EXTEND LATERAL PIPE FROM THE DRIP REMOTE CONTROL VALVE ASSEMBLY AND TERMINATE THE LATERAL PIPE END WITHIN THE MEDIAN IN THE APPROXIMATE LOCATION SHOWN. CAP THE END OF THE LATERAL PIPE WITH A SOLVENT WELD SCH. 40 PVC CAP. INSTALL A 10-INCH ROUND VALVE BOX ABOVE THE CAPPED LATERAL PIPE. COORDINATE EXACT PLACEMENT OF THE CAPPED LATERAL PIPE WITH THE OWNER'S REPRESENTATIVE ON SITE PRIOR TO CONSTRUCTION.
18. INSTALL ONE 4-INCH SLEEVE UNDER EXISTING ROADWAY INTENDED FOR ELECTRICAL POWER WIRE ROUTING FROM THE EXISTING TRANSFORMER TO THE IRRIGATION WATER CONNECTION ASSEMBLY. EMPLOY HORIZONTAL BORING TECHNIQUES TO INSTALL THE SLEEVE. REPAIR ANY DAMAGE TO THE ROADWAY AFTER BORING AND SLEEVING ACTIVITIES. COORDINATE SLEEVE INSTALLATION WITH THE OWNER'S REPRESENTATIVE ON SITE PRIOR TO CONSTRUCTION.

Aqua Engineering, Inc.
Innovative Water Solutions
4803 Innovation Drive
Fort Collins, Colorado 80525
Phone (970) 229-9668
FAX (970) 226-3855

CALL UTILITY NOTIFICATION CENTER OF COLORADO
1-800-922-1987
OR 534-6700 IN METRO DENVER
CALL 2 BUSINESS DAYS IN ADVANCE BEFORE YOU DIG, GRADE, OR EXCAVATE FOR THE MARKING OF UNDERGROUND MEMBER UTILITIES

BHA Design Incorporated
4803 Innovation Drive
Fort Collins, Colorado 80525
voice: 970.223.7577
fax: 970.223.1827

HDR Engineering, Inc.

ISSUE	DATE	DESCRIPTION
3	2/22/08	100% FINAL DESIGN
2	1/15/08	100% DESIGN REVIEW SUBMITTAL
1	12/20/07	90% SUBMITTAL

PROJECT MANAGER	CBK
PROJECT NUMBER	000000000058704

Prairie View Drive

The City of Evans COLORADO

IRRIGATION COVER SHEET

FILENAME	P-Prairie.DWG
SCALE	NTS

SHEET **IR-00B**

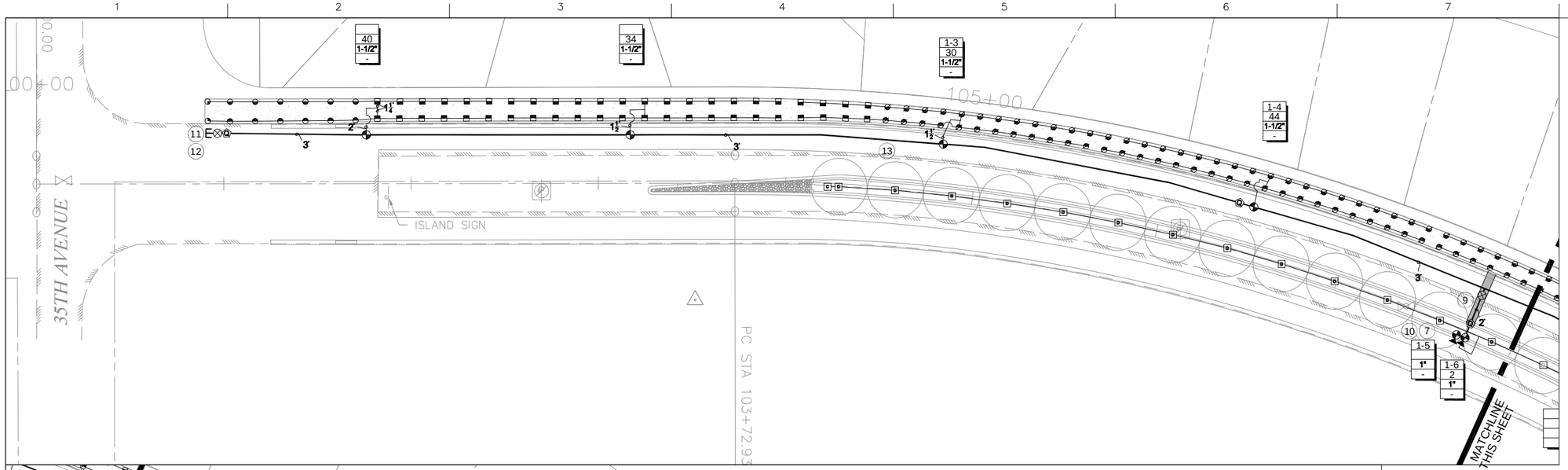

30' 0' 15' 30' 60'

1" = 30'

SCALE MUST MEASURE 1 INCH OR DRAWING IS NOT TO SCALE.

NORTH

Aqua Engineering, Inc.

Innovative Water Solutions

4803 Innovation Drive
Fort Collins, Colorado 80525
Phone (970) 229-9668
FAX (970) 226-3855

CALL UTILITY NOTIFICATION CENTER OF COLORADO

1-800-922-1987

OR 534-6700 IN METRO DENVER

CALL 2 BUSINESS DAYS IN ADVANCE BEFORE YOU DIG, GRADE, OR EXCAVATE FOR THE MARKING OF UNDERGROUND MEMBER UTILITIES

BHA Design Incorporated
4803 Innovation Drive
Fort Collins, Colorado 80525
voice: 970.223.7577
fax: 970.223.1827

HDR Engineering, Inc.

ISSUE	DATE	DESCRIPTION
3	2/22/08	100% FINAL DESIGN
2	1/15/08	100% DESIGN REVIEW SUBMITTAL
1	12/20/07	90% SUBMITTAL

PROJECT MANAGER	CBK
PROJECT NUMBER	000000000058704

Prairie View Drive

The City of Evans COLORADO

IRRIGATION PLAN

FILENAME	P-Prairie.DWG
SCALE	1" = 30'-0"

SHEET **IR-01**

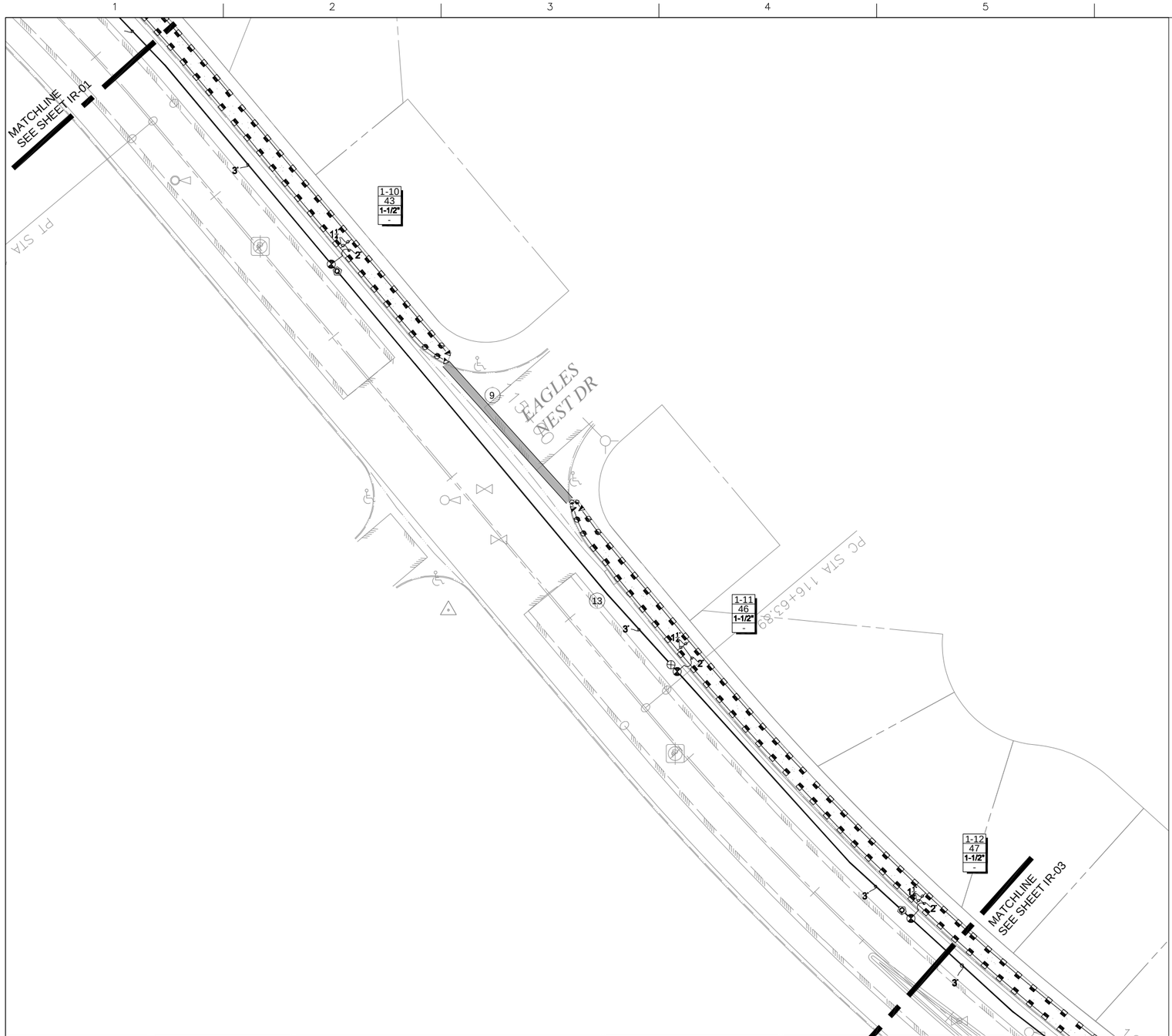

30' 0' 15' 30' 60'

1" = 30'

SCALE MUST MEASURE 1 INCH OR DRAWING IS NOT TO SCALE.

NORTH

Aqua Engineering, Inc.

Innovative Water Solutions

4803 Innovation Drive
Fort Collins, Colorado 80525
Phone (970) 229-9668
FAX (970) 226-3855

CALL UTILITY NOTIFICATION
CENTER OF COLORADO

1–800–922–1987

OR 534–6700 IN METRO DENVER

CALL 2 BUSINESS DAYS IN ADVANCE
BEFORE YOU DIG, GRADE, OR EXCAVATE
FOR THE MARKING OF UNDERGROUND
MEMBER UTILITIES

bha
BHA Design
Incorporated
4803 Innovation Drive
Fort Collins, Colorado
80525
voice: 970.223.7577
fax: 970.223.1827

HDR
HDR Engineering, Inc.

ISSUE	DATE	DESCRIPTION
3	2/22/08	100% FINAL DESIGN
2	1/15/08	100% DESIGN REVIEW SUBMITTAL
1	12/20/07	90% SUBMITTAL

PROJECT MANAGER	CBK
PROJECT NUMBER	000000000058704

Prairie View Drive

The City of Evans COLORADO

IRRIGATION PLAN

FILENAME	P–Prairie.DWG
SCALE	1' = 30'–0"

SHEET

IR-02

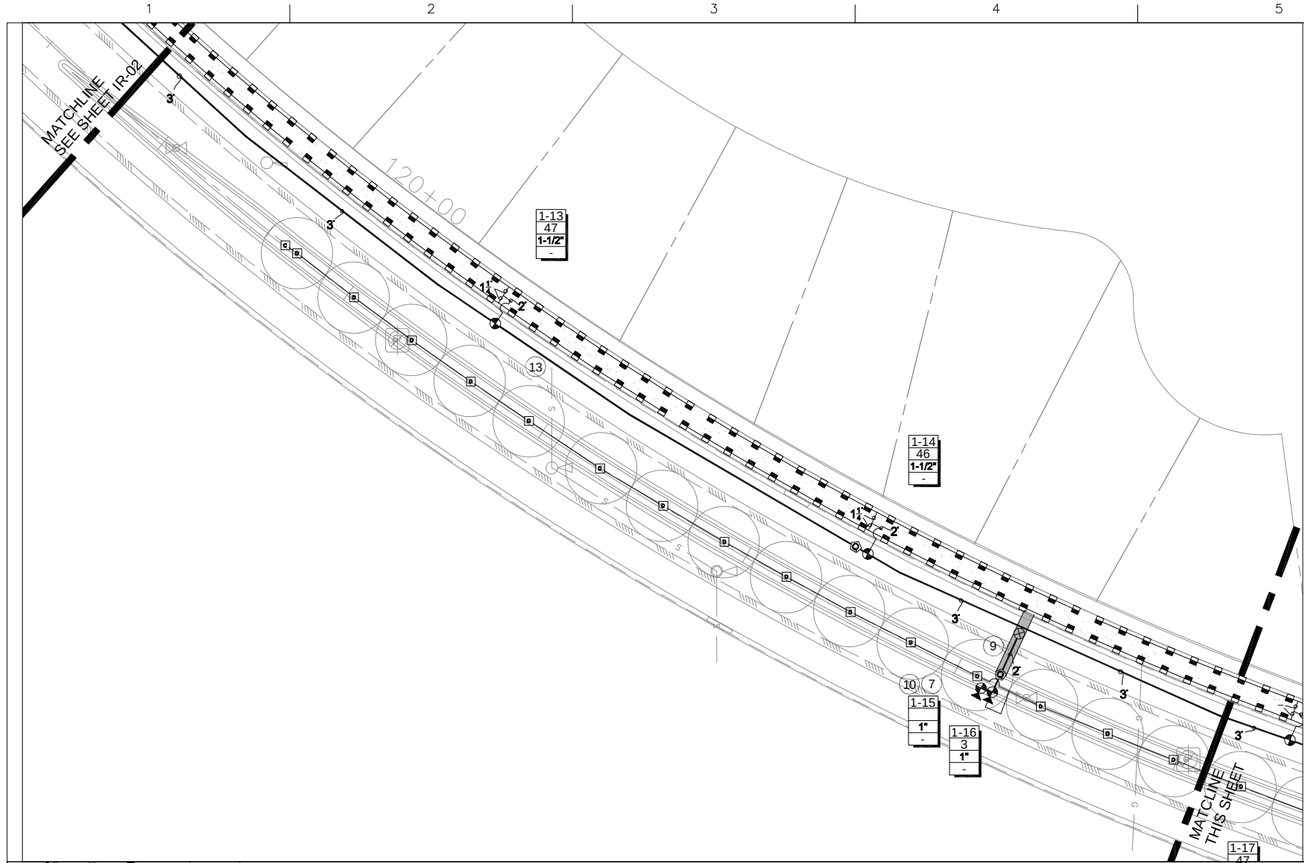

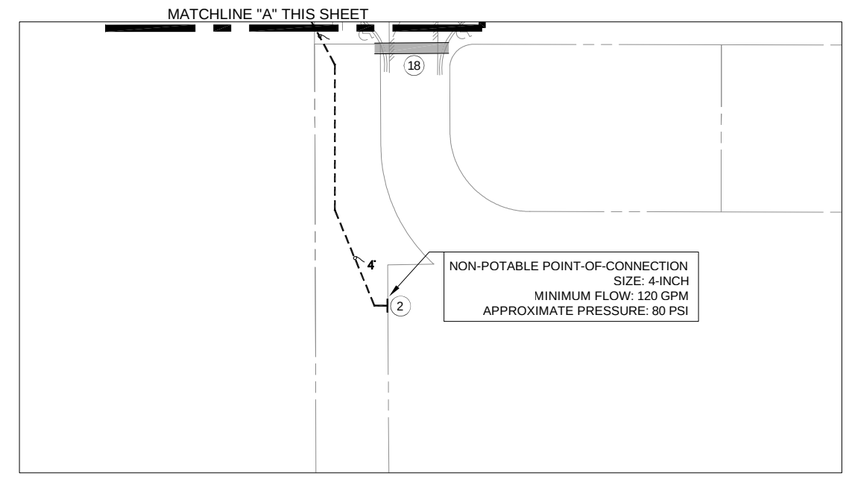

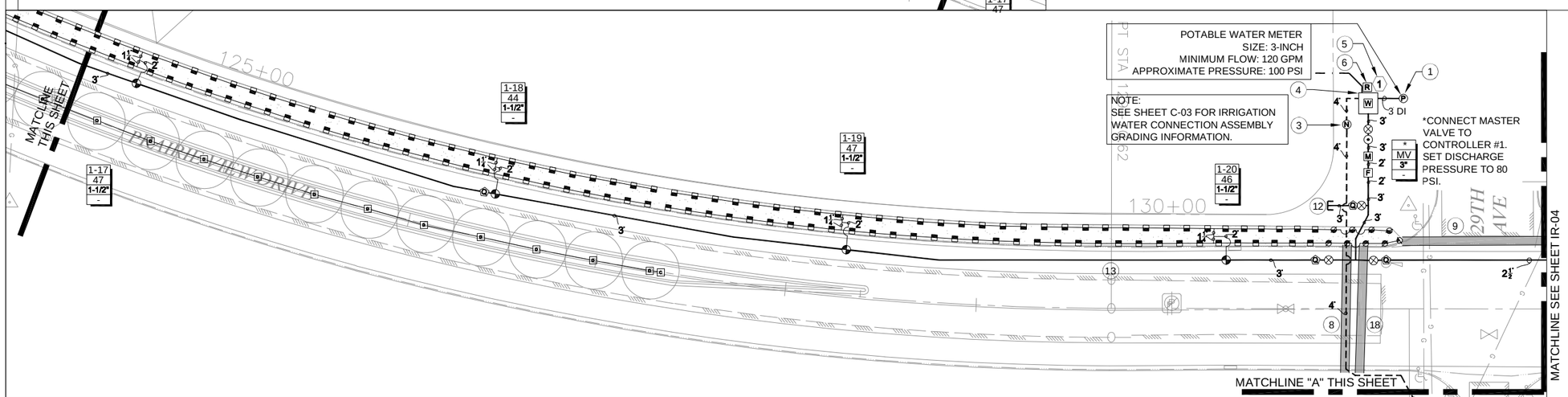

30' 0' 15' 30' 60'

1" = 30'

SCALE MUST MEASURE 1 INCH OR DRAWING IS NOT TO SCALE.

NORTH

Aqua Engineering, Inc.

Innovative Water Solutions

4803 Innovation Drive
Fort Collins, Colorado 80525
Phone (970) 229-9668
FAX (970) 226-3855

CALL UTILITY NOTIFICATION CENTER OF COLORADO

1-800-922-1987

OR 534-6700 IN METRO DENVER

CALL 2 BUSINESS DAYS IN ADVANCE BEFORE YOU DIG, GRADE, OR EXCAVATE FOR THE MARKING OF UNDERGROUND MEMBER UTILITIES

BHA Design Incorporated
4803 Innovation Drive
Fort Collins, Colorado 80525
voice: 970.223.7577
fax: 970.223.1827

HDR Engineering, Inc.

ISSUE	DATE	DESCRIPTION
3	2/22/08	100% FINAL DESIGN
2	1/15/08	100% DESIGN REVIEW SUBMITTAL
1	12/20/07	90% SUBMITTAL

PROJECT MANAGER	CBK
PROJECT NUMBER	000000000058704

Prairie View Drive

The City of Evans COLORADO

IRRIGATION PLAN

FILENAME	P-Prairie.DWG
SCALE	1" = 30'-0"

SHEET **IR-03**

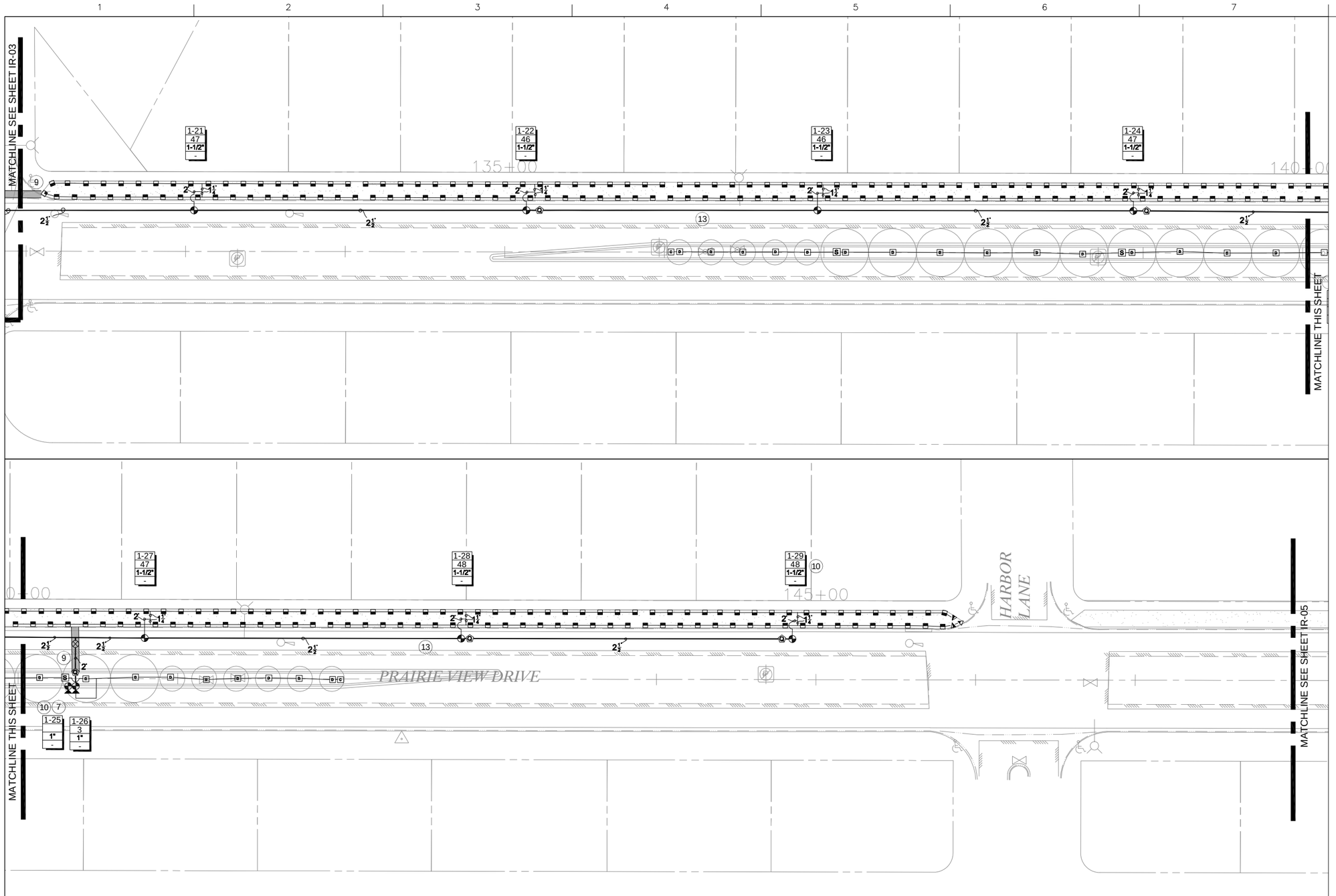

30' 0' 15' 30' 60'

1" = 30'

SCALE MUST MEASURE 1 INCH OR DRAWING IS NOT TO SCALE.

NORTH

Aqua Engineering, Inc.

Innovative Water Solutions

4803 Innovation Drive
Fort Collins, Colorado 80525
Phone (970) 229-9668
FAX (970) 226-3855

CALL UTILITY NOTIFICATION CENTER OF COLORADO

1-800-922-1987

OR 534-6700 IN METRO DENVER

CALL 2 BUSINESS DAYS IN ADVANCE BEFORE YOU DIG, GRADE, OR EXCAVATE FOR THE MARKING OF UNDERGROUND MEMBER UTILITIES

BHA Design Incorporated
4803 Innovation Drive
Fort Collins, Colorado 80525
voice: 970.223.7577
fax: 970.223.1827

HDR Engineering, Inc.

ISSUE	DATE	DESCRIPTION
3	2/22/08	100% FINAL DESIGN
2	1/15/08	100% DESIGN REVIEW SUBMITTAL
1	12/20/07	90% SUBMITTAL

PROJECT MANAGER	CBK
PROJECT NUMBER	000000000058704

Prairie View Drive

The City of Evans COLORADO

IRRIGATION PLAN

FILENAME	P-Prairie.DWG
SCALE	1" = 30'-0"

SHEET **IR-04**

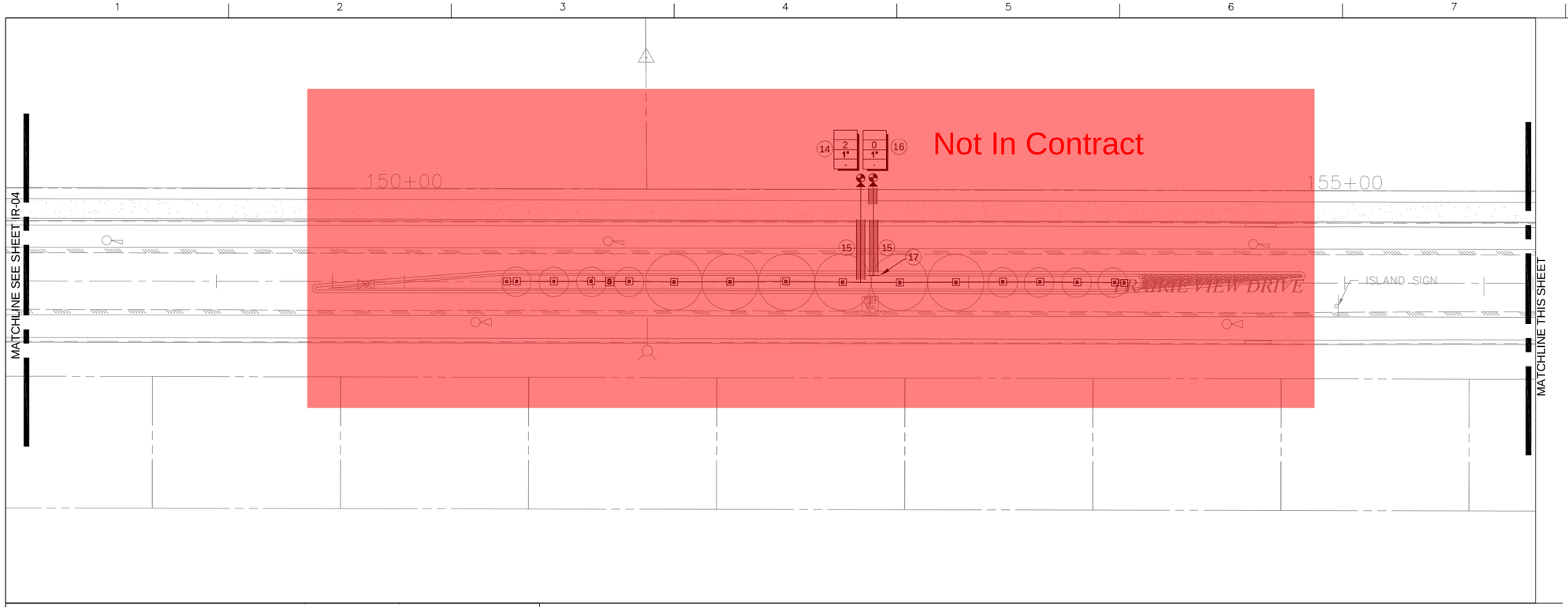

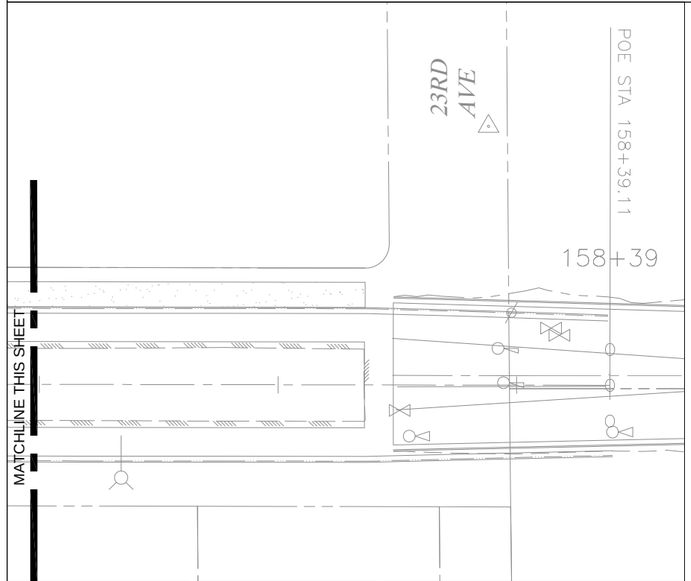

30' 0' 15' 30' 60'

1" = 30'

SCALE MUST MEASURE 1 INCH OR DRAWING IS NOT TO SCALE.

NORTH

Aqua Engineering, Inc.

Innovative Water Solutions

4803 Innovation Drive
Fort Collins, Colorado 80525
Phone (970) 229-9668
FAX (970) 226-3855

CALL UTILITY NOTIFICATION CENTER OF COLORADO

1-800-922-1987

OR 534-6700 IN METRO DENVER

CALL 2 BUSINESS DAYS IN ADVANCE BEFORE YOU DIG, GRADE, OR EXCAVATE FOR THE MARKING OF UNDERGROUND MEMBER UTILITIES

bha

BHA Design Incorporated
4803 Innovation Drive
Fort Collins, Colorado 80525
voice: 970.223.7577
fax: 970.223.1827

HDR

HDR Engineering, Inc.

ISSUE	DATE	DESCRIPTION
3	2/22/08	100% FINAL DESIGN
2	1/15/08	100% DESIGN REVIEW SUBMITTAL
1	12/20/07	90% SUBMITTAL

PROJECT MANAGER	CBK
PROJECT NUMBER	000000000058704

Prairie View Drive

The City of Evans COLORADO

IRRIGATION PLAN

FILENAME	P-Prairie.DWG
SCALE	1' = 30'-0"

SHEET **IR-05**

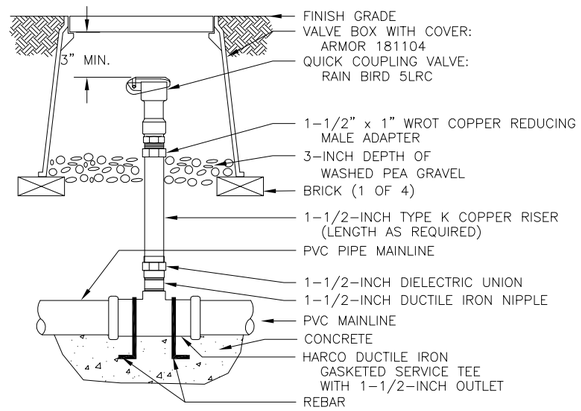

NOTE:
1. INSTALL A 4-INCH THICK CONCRETE PAD BELOW VALVE WITH NO. 4 REBAR WHEN USING PUSH ON TYPE VALVES OR TEES.

1 WINTERIZATION ASSEMBLY

N.T.S.

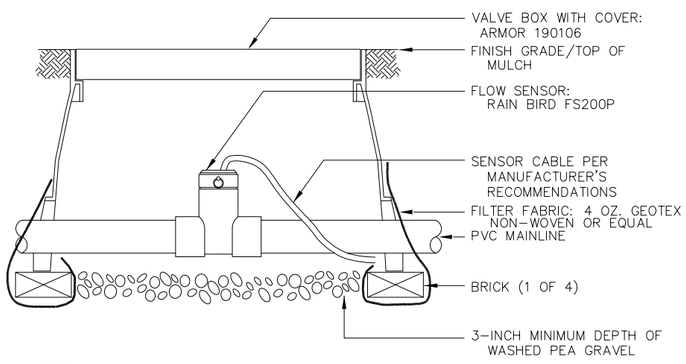

NOTES:
1. ALLOW 10 PIPE DIAMETERS UPSTREAM AND 5 PIPE DIAMETERS DOWNSTREAM OF STRAIGHT RUN OF PIPE TO ACHIEVE PROPER FLOW REGIME.
2. INSTALL FILTER FABRIC AROUND EXTERIOR OF VALVE BOX. USE DUCT TAPE TO SECURE FABRIC TO PIPE AND VALVE BOX.
3. DO NOT CUT OUT ENDS OF VALVE BOX UNNECESSARILY.
4. UPSIZE PVC MAINLINE DOWNSTREAM OF FLOW SENSOR TO 3-INCH MAINLINE PIPE PER THE FLOW SENSOR MANUFACTURER'S GUIDELINES.

3 FLOW SENSOR ASSEMBLY

N.T.S.

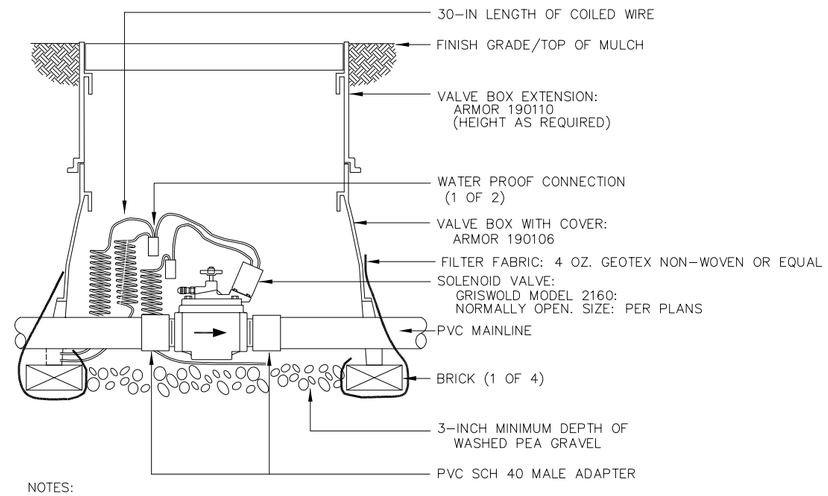

NOTES:
1. USE VALVE BOX EXTENSION AS NECESSARY TO ACHIEVE MINIMUM DIMENSIONS ABOVE ASSEMBLY.
2. NOMINAL SIZE OF ALL COMPONENTS ARE TO BE THE SAME NOMINAL SIZE AS THE SOLENOID VALVE (SIZED AS SHOWN).
3. INSTALL FILTER FABRIC AROUND EXTERIOR OF VALVE BOX. USE DUCT TAPE TO SECURE FABRIC TO PIPE AND VALVE BOX.
4. DO NOT CUT OUT ENDS OF VALVE BOX UNNECESSARILY.
5. POSITION VALVE BOX OVER VALVE TO ALLOW ACCESS TO SOLENOID.
6. INSTALL SO THAT NO PEA GRAVEL IS IN CONTACT WITH VALVE ASSEMBLY.
7. DOWNSIZE MAINLINE PIPE TO 2-INCH DOWNSTREAM OF MASTER VALVE ASSEMBLY AND IN ACCORDANCE TO THE FLOW SENSOR MANUFACTURER'S GUIDELINES.

2 MASTER VALVE ASSEMBLY

N.T.S.

Aqua Engineering, Inc.
Innovative Water Solutions
4803 Innovation Drive
Fort Collins, Colorado 80525
Phone (970) 229-9668
FAX (970) 226-3855

CALL UTILITY NOTIFICATION CENTER OF COLORADO

1-800-922-1987

OR 534-6700 IN METRO DENVER

CALL 2 BUSINESS DAYS IN ADVANCE BEFORE YOU DIG, GRADE, OR EXCAVATE FOR THE MARKING OF UNDERGROUND MEMBER UTILITIES

BHA Design Incorporated
4803 Innovation Drive
Fort Collins, Colorado 80525
voice: 970.223.7577
fax: 970.223.1827

HDR Engineering, Inc.

ISSUE	DATE	DESCRIPTION
3	2/22/08	100% FINAL DESIGN
2	1/15/08	100% DESIGN REVIEW SUBMITTAL
1	12/20/07	90% SUBMITTAL

PROJECT MANAGER	CBK
PROJECT NUMBER	000000000058704

Prairie View Drive

The City of Evans COLORADO

IRRIGATION DETAILS

FILENAME	PD-Prairie.DWG
SCALE	VARIES

SHEET **IR-06**

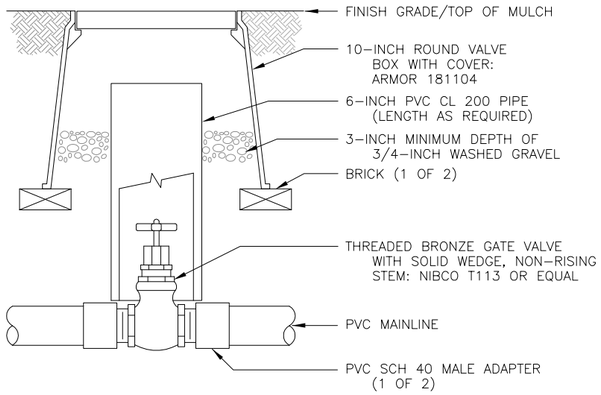

NOTE:
1. NOMINAL SIZE OF GATE VALVE TO MATCH NOMINAL MAINLINE SIZE.

1 ISOLATION GATE VALVE ASSEMBLY (2-1/2-INCH AND SMALLER)

N.T.S.

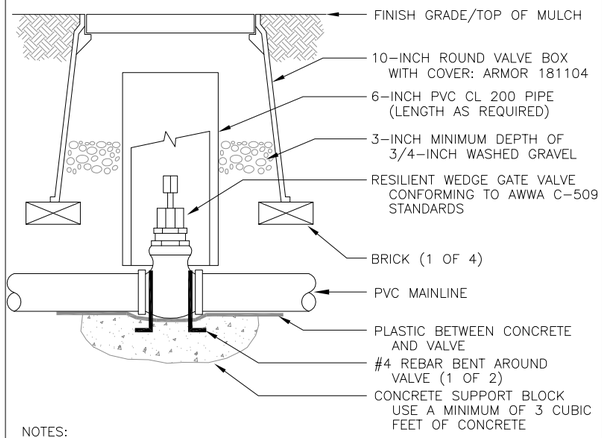

NOTES:
1. NOMINAL SIZE OF GATE VALVE TO MATCH NOMINAL MAINLINE SIZE.
2. INSTALL A 4–INCH THICK CONCRETE PAD BELOW VALVE WITH NO. 4 REBAR WHEN USING PUSH ON TYPE VALVES.
3. RESILIENT WEDGE GATE VALVE MAY HAVE EITHER MECHANICAL JOINT OR PUSH–ON GASKETED ENDS. THE OPERATOR IS A WRENCH NUT.
4. ANCHOR ISOLATION VALVE TO CONCRETE BY BENDING REBAR OVER EACH END OF VALVE AND EXTENDING A MINIMUM OF 6–INCHES INTO CONCRETE SUPPORT BLOCK.
5. USE NIBCO, KENNEDY, OR CLOW GATE VALVE.

2 ISOLATION GATE VALVE ASSEMBLY (3-INCH AND LARGER)

N.T.S.

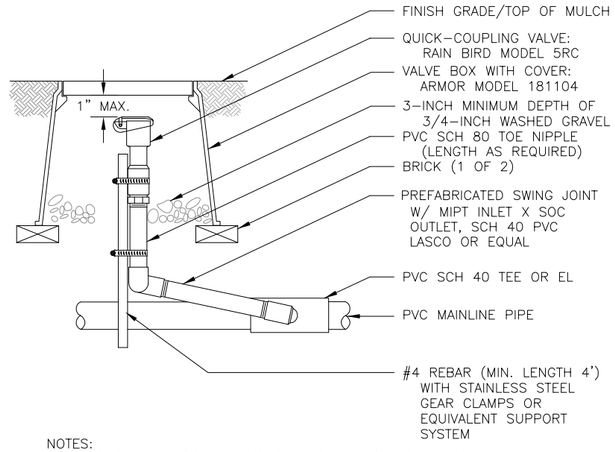

NOTES:
1. FURNISH FITTINGS AND PIPING NOMINALLY SIZED IDENTICAL TO NOMINAL QUICK COUPLING VALVE INLET SIZE.
2. IF DUCTILE IRON FITTINGS ARE CALLED FOR IN THE SPECIFICATIONS, DELETE PVC SERVICE TEE SHOWN AND USE DUCTILE IRON SERVICE TEE.

3 QUICK COUPLING VALVE ASSEMBLY

N.T.S.

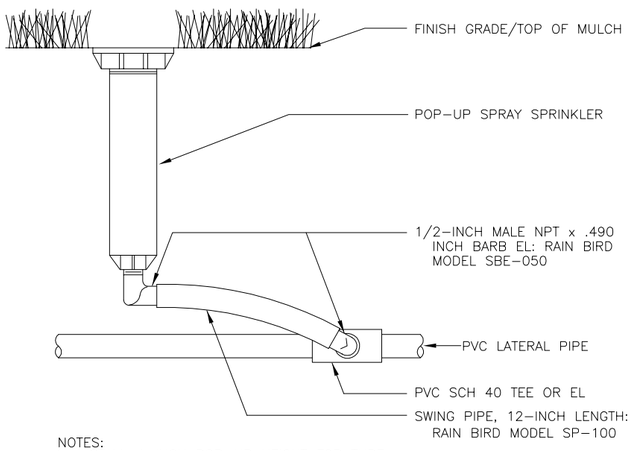

NOTES:
1. INSTALL 4–INCH POP–UP HEIGHT FOR TURF.

4 POP-UP SPRAY SPRINKLER ASSEMBLY

N.T.S.

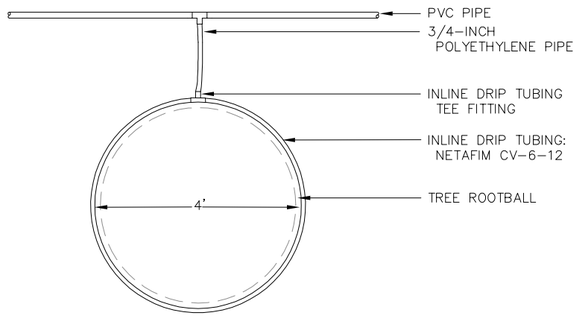

NOTES:
1. PROVIDE A RING OF INLINE DRIP TUBING AROUND EACH TREE ROOTBALL EMMITTER FLOW OF 0.6 GPH EACH, SPACED AT 1–FOOT O.C. ESTIMATED FLOW PER TREE IS 7 GPH (APPROXIMATELY 0.12 GPM PER TREE).
2. INSTALL INLINE DRIP TUBING 4–INCHES BELOW GRADE AROUND EACH TREE.

5 INLINE DRIP TREE RING ASSEMBLY

N.T.S.

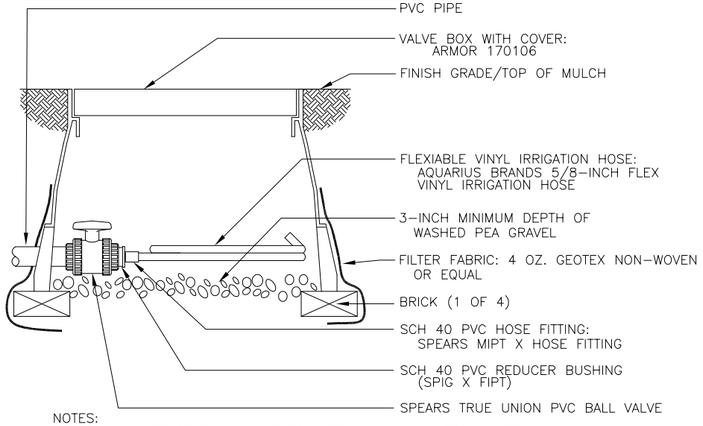

NOTES:
1. NOMINAL SIZE OF BALL VALVE TO MATCH NOMINAL LATERAL SIZE.
2. USE FOR FLUSHING AND WINTERIZATION OF DRIP LATERAL.
3. INSTALL FILTER FABRIC AROUND EXTERIOR OF VALVE BOX. USE DUCT TAPE TO SECURE FABRIC TO PIPE AND VALVE BOX.

6 INLINE DRIP FLUSH VALVE ASSEMBLY

N.T.S.

Aqua Engineering, Inc.
Innovative Water Solutions
4803 Innovation Drive
Fort Collins, Colorado 80525
Phone (970) 229-9668
FAX (970) 226-3855

CALL UTILITY NOTIFICATION CENTER OF COLORADO
1–800–922–1987
OR 534–6700 IN METRO DENVER
CALL 2 BUSINESS DAYS IN ADVANCE BEFORE YOU DIG, GRADE, OR EXCAVATE FOR THE MARKING OF UNDERGROUND MEMBER UTILITIES

bha
BHA Design Incorporated
4803 Innovation Drive
Fort Collins, Colorado 80525
voice: 970.223.7577
fax: 970.223.1827

HDR
HDR Engineering, Inc.

ISSUE	DATE	DESCRIPTION
3	2/22/08	100% FINAL DESIGN
2	1/15/08	100% DESIGN REVIEW SUBMITTAL
1	12/20/07	90% SUBMITTAL

PROJECT MANAGER	CBK
PROJECT NUMBER	000000000058704

Prairie View Drive

The City of Evans COLORADO

IRRIGATION DETAILS

FILENAME	P–Prairie.DWG
SCALE	VARIES

SHEET **IR-07**

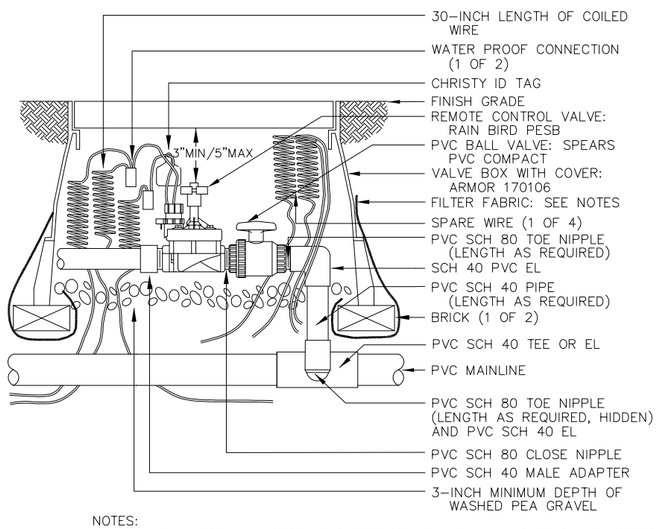

NOTES:
1. USE VALVE BOX EXTENSION AS NECESSARY TO ACHIEVE MINIMUM DIMENSIONS ABOVE ASSEMBLY.
2. NOMINAL SIZE OF ALL COMPONENTS ARE TO BE THE SAME NOMINAL SIZE AS THE SOLENOID VALVE (SIZED AS SHOWN).
3. INSTALL FILTER FABRIC AROUND EXTERIOR OF VALVE BOX. USE DUCT TAPE TO SECURE FABRIC TO PIPE AND VALVE BOX.
4. TRANSITION TO PROPER LATERAL PIPE BURIAL DEPTH USING 45° ELBOW FITTINGS DOWNSTREAM OF REMOTE CONTROL VALVE ASSEMBLY.
5. DO NOT CUT OUT ENDS OF VALVE BOX UNNECESSARILY.
6. POSITION VALVE BOX OVER VALVE TO ALLOW ACCESS TO SOLENOID, AND PROPER OPERATION OF BALL VALVE.
7. INSTALL SO THAT NO PEA GRAVEL IS IN CONTACT WITH VALVE ASSEMBLY.
8. INSTALL 4 OZ. GEOTEX NON–WOVEN FILTER FABRIC OR EQUAL.

1 REMOTE CONTROL VALVE ASSEMBLY

N.T.S.

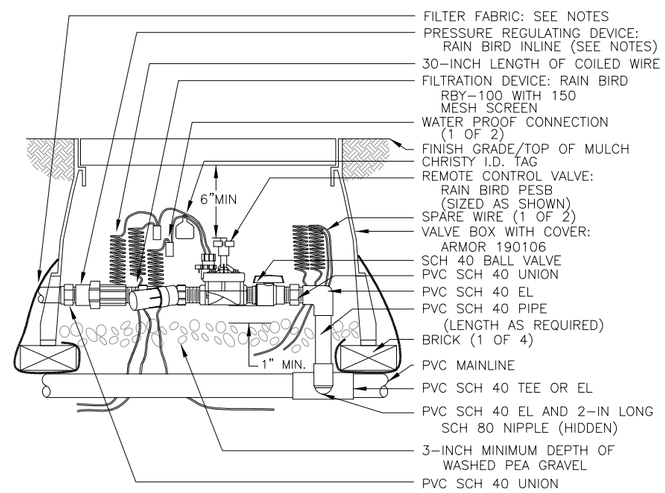

NOTES:
1. INSTALL RAIN BIRD PSI–L30X–075 PRESSURE REGULATOR ON REMOTE CONTROL VALVES WITH FLOWS BETWEEN 0.1–5 GPM.
2. INSTALL RAIN BIRD PSI–M40X–100 PRESSURE REGULATOR ON REMOTE CONTROL VALVES WITH FLOWS BETWEEN 6–15 GPM.
3. USE VALVE BOX EXTENSION AS NECESSARY TO ACHIEVE MINIMUM DIMENSIONS ABOVE ASSEMBLY.
4. NOMINAL SIZE OF ALL COMPONENTS ARE TO BE THE SAME NOMINAL SIZE AS THE SOLENOID VALVE (SIZED AS SHOWN).
5. INSTALL FILTER FABRIC AROUND EXTERIOR OF VALVE BOX. USE DUCT TAPE TO SECURE FABRIC TO PIPE AND VALVE BOX.
6. TRANSITION TO PROPER LATERAL PIPE BURIAL DEPTH USING 45° ELBOW FITTINGS DOWNSTREAM OF REMOTE CONTROL VALVE ASSEMBLY.
7. DO NOT CUT OUT ENDS OF VALVE BOX UNNECESSARILY.
8. POSITION VALVE BOX OVER VALVE TO ALLOW ACCESS TO SOLENOID, AND PROPER OPERATION OF BALL VALVE.
9. INSTALL SO THAT NO PEA GRAVEL IS IN CONTACT WITH VALVE ASSEMBLY.
9. INSTALL 4 OZ. GEOTEX NON–WOVEN FILTER FABRIC OR EQUAL.

2 DRIP REMOTE CONTROL VALVE ASSEMBLY

N.T.S.

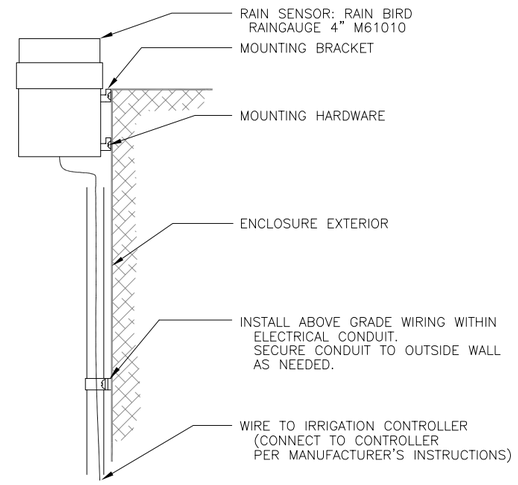

3 RAIN SENSOR ASSEMBLY

N.T.S.

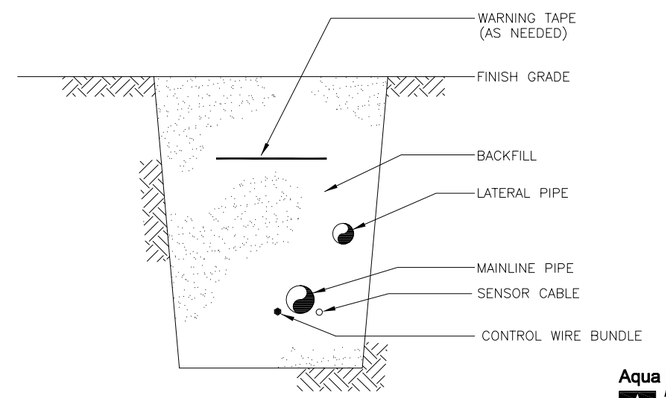

NOTES:
1. REFER TO IRRIGATION SPECIFICATIONS FOR COVERAGE DEPTH TO BURIED PIPE AND WIRE.
2. INSTALL COPPER TRACING WIRE TEST STATION EVERY 500 FEET.
3. INSTALL COPPER TRACING WIRE ON TOP OF MAINLINE PIPE. TAPE THE COPPER TRACING WIRE TO THE MAINLINE PIPE EVERY 3 TO 4 FEET INTERVALS.

4 TYPICAL TRENCH DETAIL

N.T.S.

Aqua Engineering, Inc.
Innovative Water Solutions
4803 Innovation Drive
Fort Collins, Colorado 80525
Phone (970) 229-9668
FAX (970) 226-3855

CALL UTILITY NOTIFICATION CENTER OF COLORADO
1–800–922–1987
OR 534–6700 IN METRO DENVER
CALL 2 BUSINESS DAYS IN ADVANCE BEFORE YOU DIG, GRADE, OR EXCAVATE FOR THE MARKING OF UNDERGROUND MEMBER UTILITIES

bha
BHA Design Incorporated
4803 Innovation Drive
Fort Collins, Colorado 80525
voice: 970.223.7577
fax: 970.223.1827

HDR
HDR Engineering, Inc.

ISSUE	DATE	DESCRIPTION
3	2/22/08	100% FINAL DESIGN
2	1/15/08	100% DESIGN REVIEW SUBMITTAL
1	12/20/07	90% SUBMITTAL

PROJECT MANAGER	CBK
PROJECT NUMBER	000000000058704

Prairie View Drive

The City of Evans COLORADO

IRRIGATION DETAILS

FILENAME	P–Prairie.DWG
SCALE	VARIES

SHEET **IR-08**

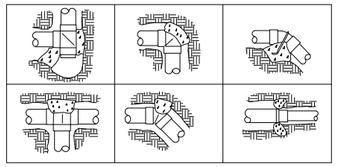

THRUST BLOCK SURFACE AREA AGAINST UNDISTURBED SOIL (SF)

FITTING SIZE	11 1/4° BEND	22 1/2° BEND	45° BEND	90° BEND	TEE OR DEAD END
3"	0.35	0.66	1.29	2.35	1.67
4"	0.56	1.08	2.12	3.87	2.75

NOTES:
1. INSTALL AND TEST ALL MAINLINE ACCORDING TO MANUFACTURER'S INSTALLATION SPECIFICATIONS.
2. REFER TO SPECIFICATIONS FOR ALL TRENCH DEPTHS AND WIDTHS.
3. USE NO. 4 REBAR WITH MASTIC COATING WHERE PIPE MUST BE ANCHORED TO THRUST BLOCK.
4. INSTALL THRUST BLOCK SO THE HORIZONTAL AND VERTICAL DIMENSIONS OF THE THRUST BLOCK ARE APPROXIMATELY EQUAL.
5. DETAIL IS FOR GENERAL INFORMATION ONLY AND IS BASED ON 140 PSI PRESSURE. EACH SITE WILL HAVE SPECIFIC REQUIREMENTS. SUBMIT THRUST BLOCK SIZING TO CITY OF EVANS FOR APPROVAL PRIOR TO INSTALLATION.

1 TYPICAL THRUST BLOCK DETAIL

N.T.S.

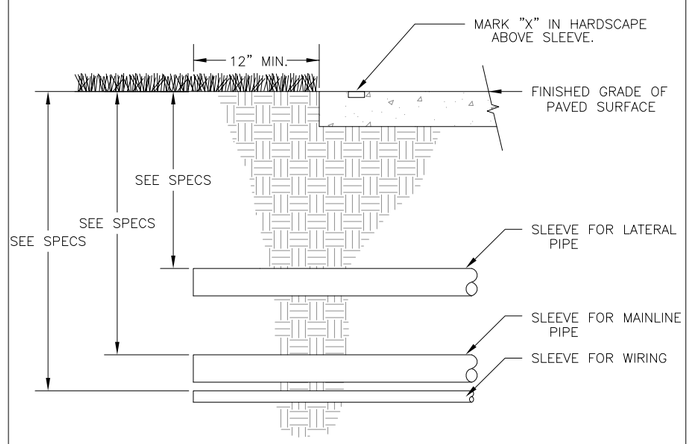

NOTE:
1. INSTALL SLEEVE SO THAT ITS LOWEST ELEVATION OCCURS AT ONE END – NOT ALONG ITS LENGTH.

2 TYPICAL SLEEVING DETAIL

N.T.S.

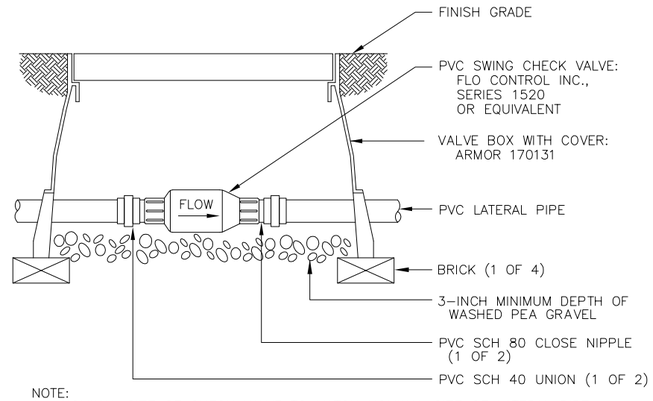

NOTE:
1. NOMINAL SIZE OF CHECK VALVE TO MATCH NOMINAL SIZE OF LATERAL PIPE.

3 SWING CHECK VALVE ASSEMBLY

N.T.S.

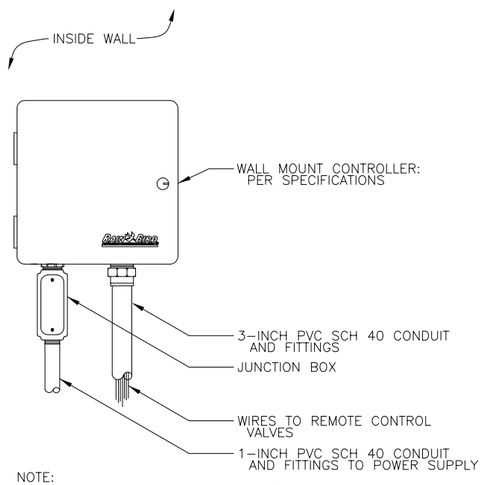

NOTE:
1. PROVIDE ANTENNA PER SPECIFICATIONS.

4 IRRIGATION CONTROLLER ASSEMBLY

1

N.T.S.

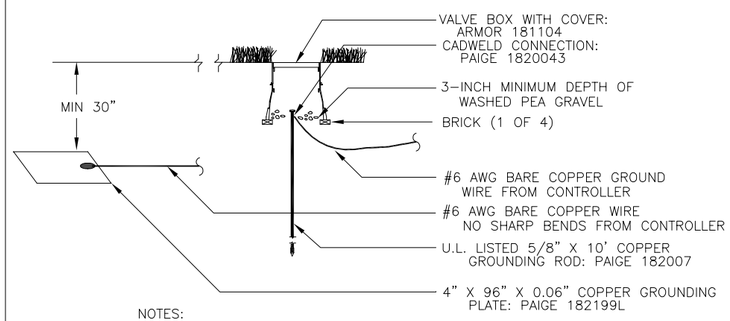

NOTES:
1. INSTALL GROUND WIRE IN SEPARATE TRENCH FROM ALL OTHER WIRE.
2. INSTALL GROUND ROD A MINIMUM OF 10–FEET FROM CONTROLLER.

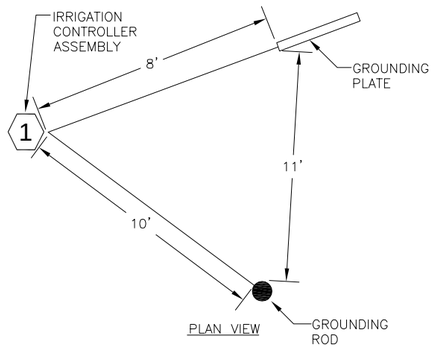

5 CONTROLLER GROUNDING DETAIL

N.T.S.

Aqua Engineering, Inc.
Innovative Water Solutions
4803 Innovation Drive
Fort Collins, Colorado 80525
Phone (970) 229-9668
FAX (970) 226-3855

CALL UTILITY NOTIFICATION CENTER OF COLORADO

1–800–922–1987

OR 534–6700 IN METRO DENVER

CALL 2 BUSINESS DAYS IN ADVANCE BEFORE YOU DIG, GRADE, OR EXCAVATE FOR THE MARKING OF UNDERGROUND MEMBER UTILITIES

BHA Design Incorporated
4803 Innovation Drive
Fort Collins, Colorado 80525
voice: 970.223.7577
fax: 970.223.1827

HDR Engineering, Inc.

ISSUE	DATE	DESCRIPTION
3	2/22/08	100% FINAL DESIGN
2	1/15/08	100% DESIGN REVIEW SUBMITTAL
1	12/20/07	90% SUBMITTAL

PROJECT MANAGER	CBK
PROJECT NUMBER	000000000058704

Prairie View Drive

The City of Evans Colorado

IRRIGATION DETAILS

FILENAME	P–Prairie.DWG
SCALE	VARIES

SHEET **IR-09**

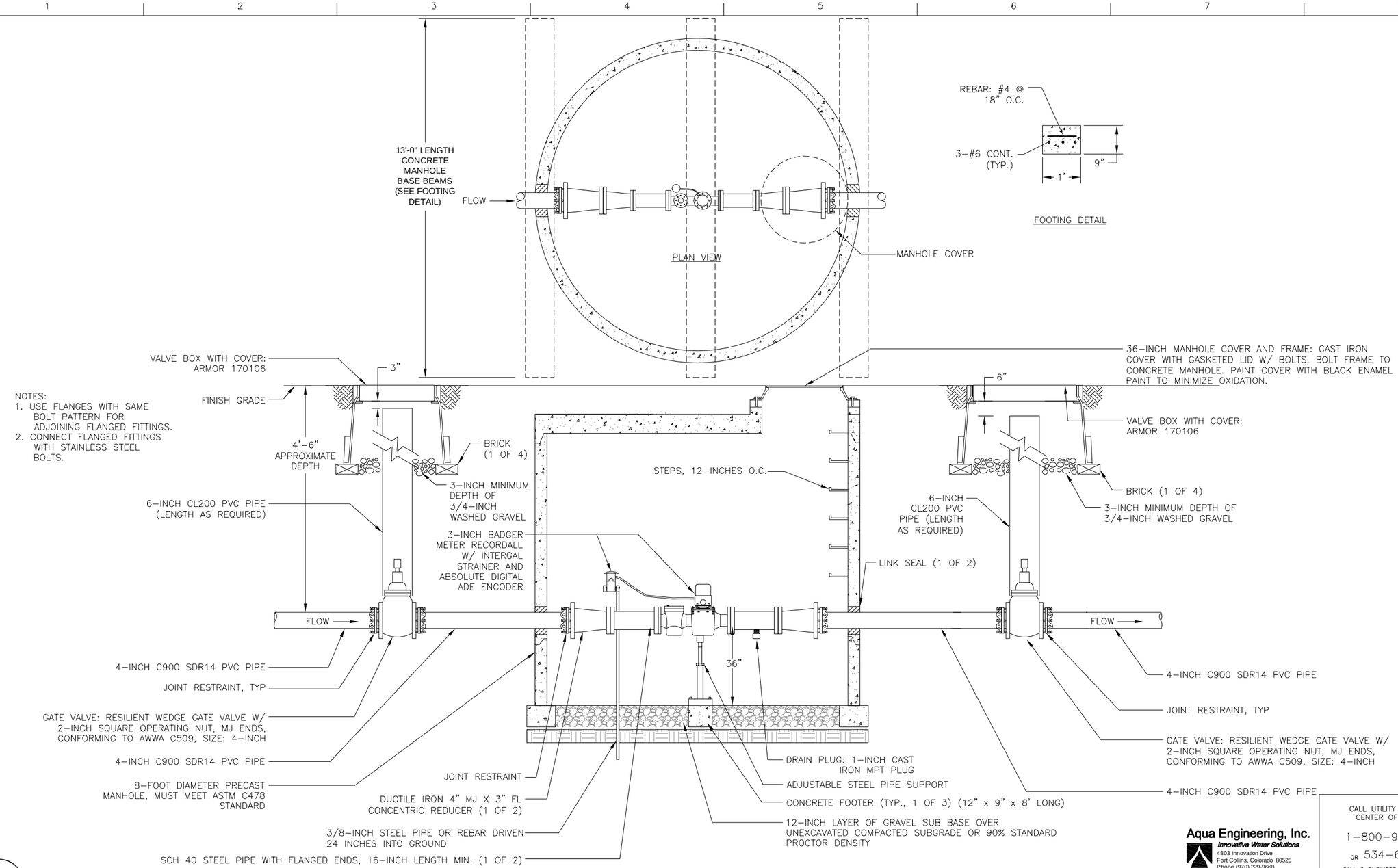

NOTES:
1. USE FLANGES WITH SAME BOLT PATTERN FOR ADJOINING FLANGED FITTINGS.
2. CONNECT FLANGED FITTINGS WITH STAINLESS STEEL BOLTS.

1 NON-POTABLE WATER METER ASSEMBLY

N.T.S.

Aqua Engineering, Inc.
Innovative Water Solutions
4803 Innovation Drive
Fort Collins, Colorado 80525
Phone (970) 229-9668
FAX (970) 226-3855

CALL UTILITY NOTIFICATION CENTER OF COLORADO
1-800-922-1987
OR 534-6700 IN METRO DENVER
CALL 2 BUSINESS DAYS IN ADVANCE BEFORE YOU DIG, GRADE, OR EXCAVATE FOR THE MARKING OF UNDERGROUND MEMBER UTILITIES

BHA Design Incorporated
4803 Innovation Drive
Fort Collins, Colorado 80525
voice: 970.223.7577
fax: 970.223.1827

HDR Engineering, Inc.

ISSUE	DATE	DESCRIPTION
3	2/22/08	100% FINAL DESIGN
2	1/15/08	100% DESIGN REVIEW SUBMITTAL
1	12/20/07	90% SUBMITTAL

PROJECT MANAGER	CBK
PROJECT NUMBER	000000000058704

Prairie View Drive

The City of Evans Colorado

IRRIGATION DETAILS

FILENAME	P-Prairie.DWG
SCALE	VARIES

SHEET **IR-10**

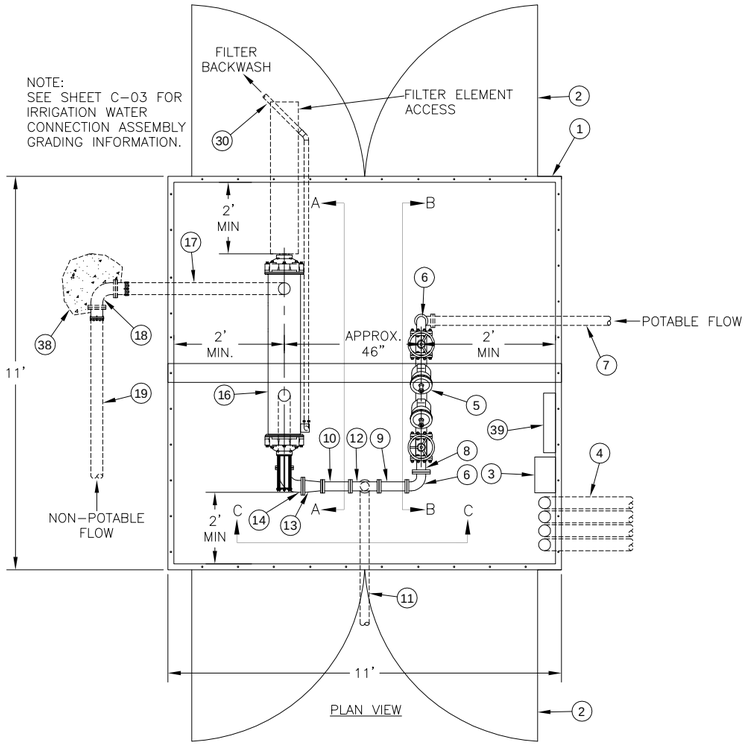

PLAN VIEW

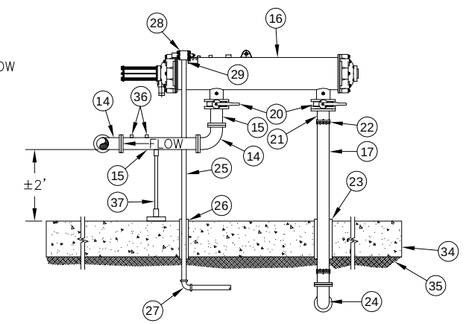

SECTION AA

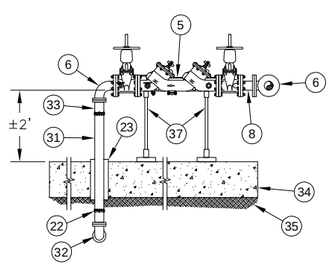

SECTION BB

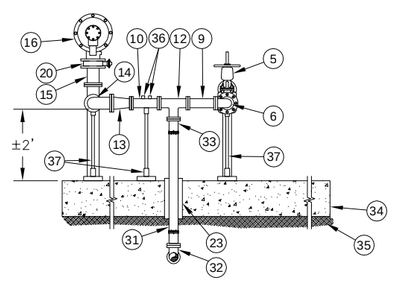

SECTION CC

EQUIPMENT LIST

1. 11' x 11' OUTSIDE DIMENSION, ALUMINUM ENCLOSURE WITH HINGED DOUBLE DOORS ON OPPOSING SIDES, REFER TO SPECIFICATIONS
2. HINGED DOUBLE DOORS
3. WALL MOUNTED IRRIGATION CONTROLLER, REFER TO IRRIGATION PLANS AND SPECIFICATIONS
4. 4-INCH CL 200 SLEEVES (1 OF 4). INSTALL LONG RADIUS SCH 40 PVC SWEEP ELBOWS (NOT SHOWN) AND EXTEND SLEEVE ENDS 4-FEET MINIMUM BEYOND CONCRETE PAD. INSTALL A 10-INCH ROUND VALVE BOX OVER EACH SLEEVE END.
5. 3-INCH FEBCO 860 REDUCED PRESSURE BACKFLOW PREVENTOR
6. 3-INCH SCH 40 STEEL ELL, (FL x FL)
7. 3-INCH DUCTILE IRON PIPE FROM POTABLE WATER METER ASSEMBLY
8. 3-INCH SCH 40 STEEL PIPE, LENGTH AS REQUIRED, (FL X FL)
9. 3-INCH SCH 40 STEEL BLIND FLANGE SPOOL PIECE, LENGTH: 8-INCHES
10. 3-INCH SCH 40 STEEL OPEN FLANGE SPOOL PIECE, LENGTH: 8-INCHES
11. 3-INCH CL 200 PVC PIPE
12. 3-INCH SCH 40 STEEL TEE, (FL X FL x FL)
13. 4" x 3" SCH 40 STEEL CONCENTRIC REDUCER, (FL X FL)
14. 4-INCH SCH 40 STEEL ELL, (FL x FL)
15. 4-INCH SCH 40 STEEL PIPE, LENGTH AS REQUIRED, (FL X FL)
16. 4-INCH AMIAD FILTOMAT 104LP HYDRAULIC FILTER WITH 300 MICRON SCREEN AND 4-INCH FLANGE CONNECTIONS.
17. 4-INCH DUCTILE IRON PIPE, LENGTH AS REQUIRED
18. DUCTILE IRON MJ x MJ ELL RESTRAINED WITH JOINT RESTRAINTS, BOTH SIDES
19. 4-INCH C900 SDR14 PVC PIPE FROM NON-POTABLE WATER METER ASSEMBLY
20. 4-INCH SCH 40 STEEL BUTTERFLY VALVE
21. 4-INCH DUCTILE IRON MJ x FL FITTING
22. JOINT RESTRAINT
23. 12-INCH SCH 40 PVC SLEEVE
24. 4-INCH DUCTILE IRON ELL
25. 1-1/2-INCH SCH 40 PVC BACKFLUSH PIPE
26. 6-INCH CL 200 PVC SLEEVE
27. 1-1/2-INCH SCH 40 PVC ELL
28. 1-1/2-INCH MPT FILTER BACKFLUSH VALVE DISCHARGE END
29. NECESSARY 1-1/2-INCH SCH 40 PVC FITTINGS
30. 1-1/2-INCH SCH 40 45° FITTING
31. 3-INCH DUCTILE IRON PIPE
32. 3-INCH DUCTILE IRON ELL
33. 3-INCH DUCTILE IRON MJ x FL FITTING
34. 12-INCH THICK CONCRETE PAD, 3000 PSI CONCRETE WITH #6 REBAR, 12 INCHES O.C. BOTH WAYS. EXTEND CONCRETE PAD 12-INCHES ALL DIRECTIONS FROM ALUMINUM ENCLOSURE.
35. COMPACT SUBGRADE TO 90% STANDARD PROCTOR DENSITY
36. 1-INCH THREAD-O-LETS (2)
37. STEEL PIPE SUPPORT
38. THRUST BLOCK
39. 500 WATT WALL MOUNTED ELECTRIC HEATER, 240 VOLT SINGLE PHASE INPUT, GRAINGER STOCK MODEL NUMBER 3UH18 OR EQUAL

Aqua Engineering, Inc.
Innovative Water Solutions
4803 Innovation Drive
Fort Collins, Colorado 80525
Phone (970) 229-9668
FAX (970) 226-3855

CALL UTILITY NOTIFICATION CENTER OF COLORADO
1-800-922-1987
OR 534-6700 IN METRO DENVER
CALL 2 BUSINESS DAYS IN ADVANCE BEFORE YOU DIG, GRADE, OR EXCAVATE FOR THE MARKING OF UNDERGROUND MEMBER UTILITIES

1 IRRIGATION WATER CONNECTION ASSEMBLY

1/2" = 1'

NORTH

bha
BHA Design Incorporated
4803 Innovation Drive
Fort Collins, Colorado 80525
voice: 970.223.7577
fax: 970.223.1827

HDR
HDR Engineering, Inc.

ISSUE	DATE	DESCRIPTION
3	2/22/08	100% FINAL DESIGN
2	1/15/08	100% DESIGN REVIEW SUBMITTAL
1	12/20/07	90% SUBMITTAL

PROJECT MANAGER	CBK
PROJECT NUMBER	000000000058704

Prairie View Drive

The City of Evans COLORADO

IRRIGATION DETAILS

FILENAME	PD-Prairie.DWG
SCALE	VARIES

SHEET **IR-11**

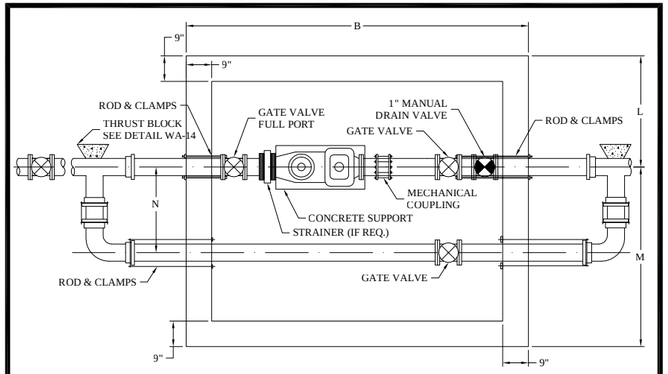

PLAN VIEW

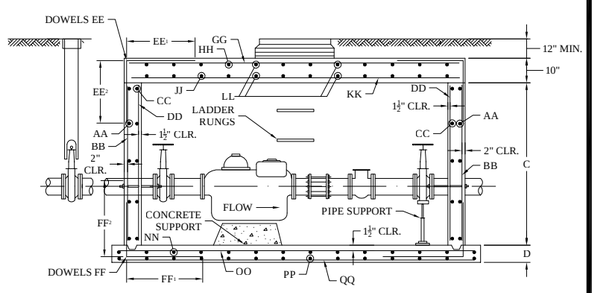

SECTION VIEW

Public Works Department

METER SETTING DETAIL
FOR 3" AND LARGER
SHEET 1 OF 4

Scale: N.T.S. WA-9 April 2004

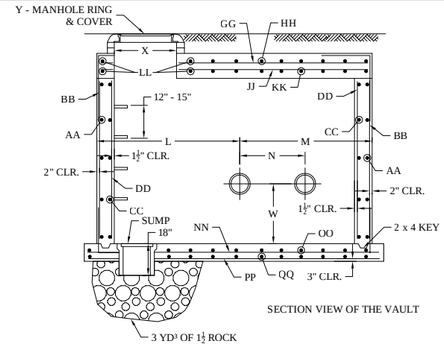

SECTION VIEW OF THE VAULT

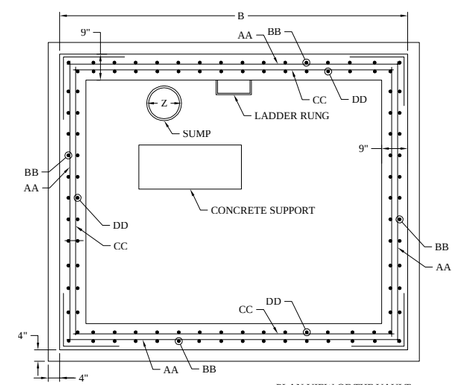

PLAN VIEW OF THE VAULT

Public Works Department

METER SETTING DETAIL
FOR 3" AND LARGER
SHEET 2 OF 4

Scale: N.T.S. WA-9 April 2004

NOTES:
1. THE POTABLE WATER DETAILS FROM THE CITY OF EVANS HAVE BEEN PROVIDED FOR REFERENCE.
2. INSTALL THE 3-INCH METER PER CITY STANDARDS.
3. COORDINATE INSTALLATION OF THE SERVICE LINE, CURB STOP VALVE, AND METER WITH THE CITY OF EVANS.

Aqua Engineering, Inc.
Innovative Water Solutions
4803 Innovation Drive
Fort Collins, Colorado 80525
Phone (970) 229-9668
FAX (970) 226-3855

CALL UTILITY NOTIFICATION CENTER OF COLORADO

1-800-922-1987

OR 534-6700 IN METRO DENVER

CALL 2 BUSINESS DAYS IN ADVANCE BEFORE YOU DIG, GRADE, OR EXCAVATE FOR THE MARKING OF UNDERGROUND MEMBER UTILITIES

1 POTABLE WATER METER DETAILS

N.T.S.

BHA Design Incorporated
4803 Innovation Drive
Fort Collins, Colorado 80525
voice: 970.223.7577
fax: 970.223.1827

HDR Engineering, Inc.

ISSUE	DATE	DESCRIPTION
3	2/22/08	100% FINAL DESIGN
2	1/15/08	100% DESIGN REVIEW SUBMITTAL
1	12/20/07	90% SUBMITTAL

PROJECT MANAGER	CBK
PROJECT NUMBER	000000000058704

Prairie View Drive

The City of Evans Colorado

IRRIGATION DETAILS

FILENAME	P-Prairie.DWG
SCALE	VARIES

SHEET IR-12

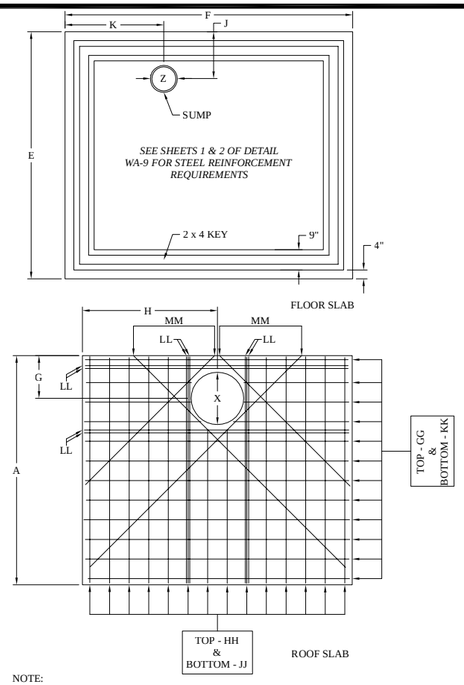

NOTE:

1. THE ROOF SLAB MAY BE CAST IN SECTIONS FOR FUTURE ACCESS. THE SECTIONS SHALL BE CAST SUCH THAT THE INDIVIDUAL SECTION WEIGHT DOES NOT EXCEED 7,500 POUNDS.

2. BARS MM - BOTTOM ONLY & BARS LL - TOP AND BOTTOM

Public Works Department

METER SETTING DETAIL
FOR 3" AND LARGER
SHEET 3 OF 4

Scale: N.T.S. WA-9 April 2004

METER SIZE	PIPE SIZE DIA.	VAULT DIMENSIONS															MANHOLE		SUMP	REMARKS
		A	B	C*	D	E	F	G	H	J	K	L	M	N	P	W	X	Y	Z	
3"	3"	8'-6"	10'-6"	6'-0"	0'-8"	9'-2"	11'-2"	2'-3"	4'-8"	1'-9"	2'-8"	3'-3"	5'-3"	2'-6"	0'-9"	2'-0"	36"	24"x36"	12"	USE 5/16"x 7" MIDDLE RING ON COUPLINGS.
4"	4"	8'-6"	11'-11"	6'-0"	0'-8"	9'-2"	12'-7"	2'-3"	5'-4"	1'-9"	3'-4"	3'-3"	5'-3"	2'-6"	1'-0"	2'-6"	36"	24"x36"	12"	USE 5/16"x 7" MIDDLE RING ON COUPLINGS.
6"	6"	8'-6"	13'-6"	6'-0"	0'-8"	9'-2"	14'-2"	2'-3"	5'-8"	1'-9"	3'-8"	3'-3"	5'-3"	2'-6"	1'-6"	2'-6"	36"	24"x36"	12"	USE 5/16"x 7" MIDDLE RING ON COUPLINGS.
8"	8"	8'-6"	15'-5"	6'-0"	0'-10"	9'-2"	16'-1"	2'-3"	5'-3"	2'-3"	3'-0"	3'-3"	5'-3"	2'-6"	2'-0"	2'-6"	36"	24"x36"	18"	USE 5/16"x 7" MIDDLE RING ON COUPLINGS.
10"	10"	8'-6"	17'-9"	6'-0"	0'-10"	9'-2"	17'-5"	2'-3"	4'-11"	2'-3"	3'-0"	3'-3"	5'-3"	2'-6"	2'-6"	2'-6"	36"	24"x36"	18"	USE 3/8"x 7" MIDDLE RING ON COUPLINGS.
12"	12"	8'-6"	19'-10"	6'-0"	0'-10"	9'-2"	20'-6"	2'-3"	5'-0"	2'-3"	3'-0"	3'-3"	5'-3"	2'-6"	3'-0"	2'-6"	36"	24"x36"	18"	USE 3/8"x 7" MIDDLE RING ON COUPLINGS.

METER SIZE	WALLS								WALL DOWELS						ROOF SLAB									FLOOR SLAB							
	AA		BB		CC		DD		EE & FF		EE_1	EE_2	FF_1	FF_2	GG		HH		JJ		KK		LL		MM	NN		OO		PP		QQ	
	BAR	DIST.	BAR	DIST.	BAR	DIST.	BAR	DIST.	BAR	DIST.					BAR	DIST.	BAR	DIST.	BAR	DIST.	BAR	DIST.	TOP	BOT.	BOT.	BAR	DIST.	BAR	DIST.	BAR	DIST.	BAR	DIST.
3"	No.4	16"	No.4	12"					No.5	12"	2'-6"	2'-0"	3'-0"	2'-0"					No.7	12"	No.7	12"		No.7	No.7	No.5	12"	No.5	12"				
4"	No.4	16"	No.4	12"					No.5	12"	2'-6"	2'-0"	3'-0"	2'-0"					No.7	12"	No.7	12"		No.7	No.7	No.5	12"	No.5	12"				
6"	No.4	16"	No.4	12"					No.5	12"	2'-6"	2'-0"	3'-0"	2'-0"					No.7	12"	No.7	12"		No.7	No.7	No.5	12"	No.5	12"				
8"	No.4	16"	No.5	12"	No.4	16"	No.5	12"	No.5	12"	3'-0"	2'-6"	3'-0"	2'-6"	No.5	12"	No.5	12"	No.7	12"	No.8	9"	No.5	No.7	No.7	No.5	12"	No.5	12"	No.5	12"	No.5	12"
10"	No.4	16"	No.5	12"	No.4	16"	No.5	12"	No.5	12"	3'-0"	2'-6"	3'-0"	2'-6"	No.5	12"	No.5	12"	No.7	12"	No.8	9"	No.5	No.7	No.7	No.5	12"	No.5	12"	No.5	12"	No.5	12"
12"	No.4	16"	No.5	12"	No.4	16"	No.5	12"	No.5	12"	3'-0"	2'-6"	3'-0"	2'-6"	No.5	12"	No.5	12"	No.7	12"	No.8	9"	No.5	No.7	No.7	No.5	12"	No.5	12"	No.5	12"	No.5	12"

Public Works Department

METER SETTING FOR
3" AND LARGER
SHEET 4 OF 4

Scale: N.T.S. WA-9 April 2004

Aqua Engineering, Inc.
Innovative Water Solutions
4803 Innovation Drive
Fort Collins, Colorado 80525
Phone (970) 229-9668
FAX (970) 226-3855

NOTES:
1. THE POTABLE WATER DETAILS FROM THE CITY OF EVANS HAVE BEEN PROVIDED FOR REFERENCE.
2. INSTALL THE 3-INCH METER PER CITY STANDARDS.
3. COORDINATE INSTALLATION OF THE SERVICE LINE, CURB STOP VALVE, AND METER WITH THE CITY OF EVANS.

CALL UTILITY NOTIFICATION CENTER OF COLORADO
1-800-922-1987
OR 534-6700 IN METRO DENVER
CALL 2 BUSINESS DAYS IN ADVANCE BEFORE YOU DIG, GRADE, OR EXCAVATE FOR THE MARKING OF UNDERGROUND MEMBER UTILITIES

1 POTABLE WATER METER DETAILS

N.T.S.

BHA Design Incorporated
4803 Innovation Drive
Fort Collins, Colorado 80525
voice: 970.223.7577
fax: 970.223.1827

HDR Engineering, Inc.

ISSUE	DATE	DESCRIPTION
3	2/22/08	100% FINAL DESIGN
2	1/15/08	100% DESIGN REVIEW SUBMITTAL
1	12/20/07	90% SUBMITTAL

PROJECT MANAGER	CBK
PROJECT NUMBER	000000000058704

Prairie View Drive

The City of Evans Colorado

IRRIGATION DETAILS

FILENAME	P-Prairie.DWG
SCALE	VARIES

SHEET IR-13

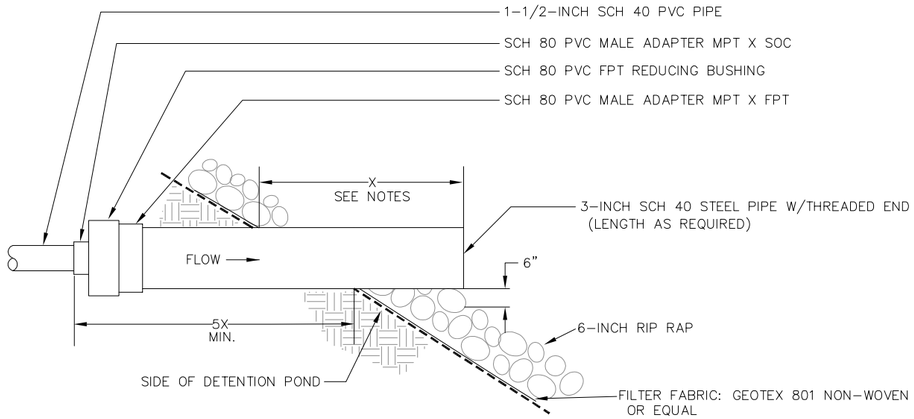

NOTES:

1. EXTEND FILTER BACKFLUSH PIPE OUTLET 24-INCHES MINIMUM BEYOND POND PENETRATION.
2. INSTALL RIP RAP 36-INCHES WIDE FROM 12-INCHES ABOVE PIPE TO BOTTOM OF POND ON FILTER FABRIC, RIP RAP IS TO BE 12-INCHES DEEP.
3. COMPACT AROUND PIPE PENETRATION AT 90% STANDARD PROCTOR DENSITY.
4. COORDINATE EXACT LOCATION AND ELEVATION OF BACKFLUSH PIPE OUTLET WITH OWNER'S REPRESENTATIVE ON SITE PRIOR TO CONSTRUCTION.

1 BACKFLUSH PIPE OUTLET DETAIL

N.T.S.

Aqua Engineering, Inc.
Innovative Water Solutions
4803 Innovation Drive
Fort Collins, Colorado 80525
Phone (970) 229-9668
FAX (970) 226-3855

CALL UTILITY NOTIFICATION CENTER OF COLORADO

1-800-922-1987

OR 534-6700 IN METRO DENVER

CALL 2 BUSINESS DAYS IN ADVANCE BEFORE YOU DIG, GRADE, OR EXCAVATE FOR THE MARKING OF UNDERGROUND MEMBER UTILITIES

BHA Design Incorporated
4803 Innovation Drive
Fort Collins, Colorado 80525
voice: 970.223.7577
fax: 970.223.1827

HDR Engineering, Inc.

ISSUE	DATE	DESCRIPTION
3	2/22/08	100% FINAL DESIGN
2	1/15/08	100% DESIGN REVIEW SUBMITTAL
1	12/20/07	90% SUBMITTAL

PROJECT MANAGER	CBK
PROJECT NUMBER	000000000058704

Prairie View Drive

The City of Evans COLORADO

IRRIGATION DETAILS

FILENAME	P-Prairie.DWG
SCALE	VARIES

SHEET IR-14

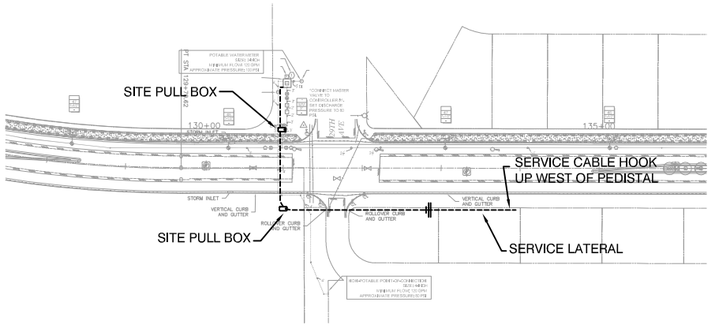

ELECTRICAL SITE PLAN

SCALE ----- 1/8" = 1'0"

ONE LINE SCHEDULE			
	FEEDER	FEEDER	FEEDER
INITIAL 3 PHASE ASCI	12632	3,097	3,088
FEEDER OVER CURRENT PROTECTION	NONE	NONE	100 AMP FRN-R
FED FROM	UTILITY TRANSFORMER	ELECTRIC METER	MAIN SERVICE SWITCH
FED TO	ELECTRIC METER	MAIN SERVICE SWITCH	PANEL LP11
LOCATION OF LOAD EQUIPMENT	OUTSIDE BUILDING	OUTSIDE BUILDING	INSIDE BUILDING
FEEDER SIZE, CU.	3 # 1	3 # 1 & 1 # 6 GROUND	3 # 1 & 1 # 6 GROUND
CONDUIT SIZE, INCHES	1 1/2'	1 1/2"	1 1/2'
NUMBER OF PARALLEL FEEDERS	1	1	1
ESTIMATED FEEDER LENGTH	450	1	5
LINE TO LINE VOLTAGE	240	240	240
C FACTOR	7692	7692	7692
F FACTOR	3.079173167	0.002301988	0.008362978
M FACTOR	0.24514772	0.99710641	0.991706381
NOTES			
FINAL 3 PHASE ASCI AT LOAD	3,097	3,088	3,082

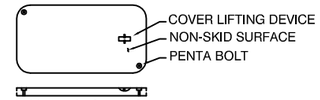

COVER DETAIL

NTS

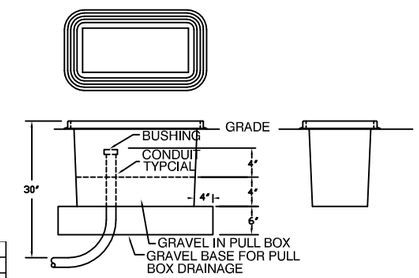

SITE PULL BOX DETAIL

NTS

PANELBOARD SCHEDULE							
Phase to Neutral Voltage:	120		Panel Name:	PANEL LP11			
Phase to Phase Voltage:	240		Panel Location:	PUMP ROOM			
Bus Rating:	100 AMP		Panel Feed:	MAIN SERVICE DISCONNECT			
Main Breaker:	M.L.O.		Panel Feeder:	SEE ELECTRICAL ONE LINE			
No. of Wires:	3		Feeder Conduit:	SEE ELECTRICAL ONE LINE			
Mounting:	SURFACE		Interrupt Rating:	SEE ELECTRICAL ONE LINE			
BRKR. NO.	Description	Breaker/ Phase	Lights LN voltamps	Recpt. LN voltamps	Equip. LN voltamps	Equip LL voltamps	Phase
1	ELECTRIC HEATER	15/2				250	A
3						250	B
5	SPARE	20/1					A
7	SPARE	20/1					B
9	SPARE	20/1					A
11	SPARE	20/1					B
13	SPARE	20/1					A
15	SPACE						B
17	SPACE						A
19	SPACE						B
21	SPACE						A
23	SPACE						B
25	SPACE						A
27	SPACE						B
29	SPACE						A
2	CONTROLLER	20/1			500		A
4	LIGHTS	20/1	124				B
6	RECEPTACLES	20/1		360			A
8	SPARE	20/1					B
10	SPARE	20/1					A
12	SPARE	20/1					B
14	SPARE	20/1					A
16	SPACE						B
18	SPACE						A
20	SPACE						B
22	SPACE						A
24	SPACE						B
26	SPACE						A
28	SPACE						B
30	SPACE						A
	Phase A Totals (VA):	1,110	0	360	500	250	A
	Phase B Totals (VA):	374	124	0	0	250	B
	Column Totals (VA):		124	360	500	500	
	Phase A Current (Amps):	9		Total Panel Load (VA):		1,484	
	Phase B Current (Amps):	3					
				DEMAND LAOD (KVA):		1,515	
	Neutral Current (Amps):	6					
	Special Requirements:						

LIGHTING SCHEDULE:

"A" METALUX # VT2-2-32-LEX-120-EB18-WL-VR. 2-T8 LAMPS, 120 VOLT OPERATION, LISTED FOR WET LOCATIONS, FIBERGLASS HOUSING, LEXAN LENS, ELECTRONIC BALLAST.

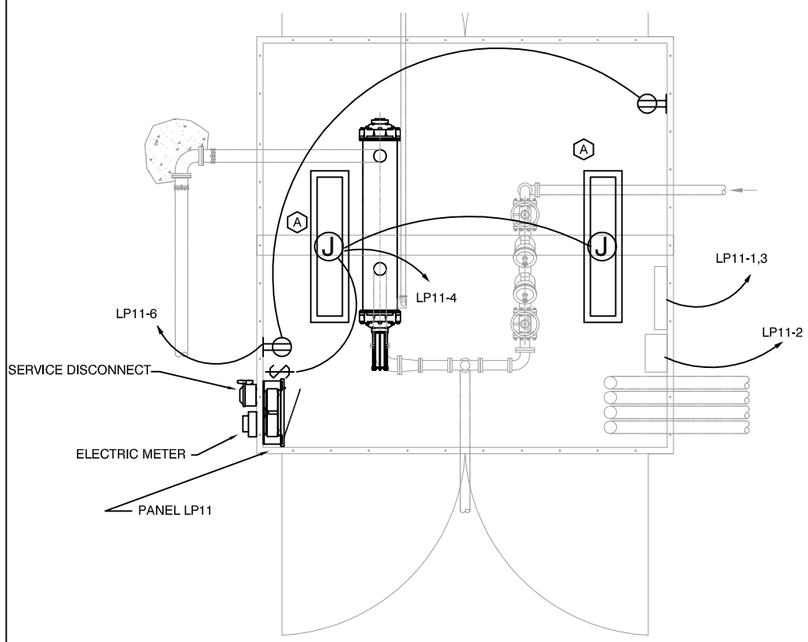

ELECTRICAL BUILDING PLAN

SCALE ----- 1/2" = 1'0"

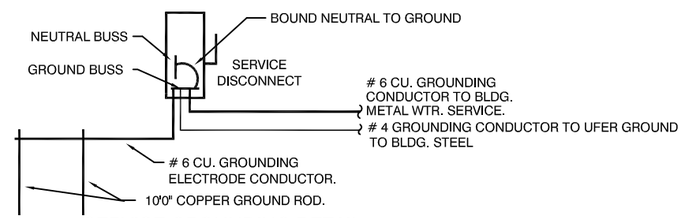

SERVICE GROUNDING DETAIL

NTS

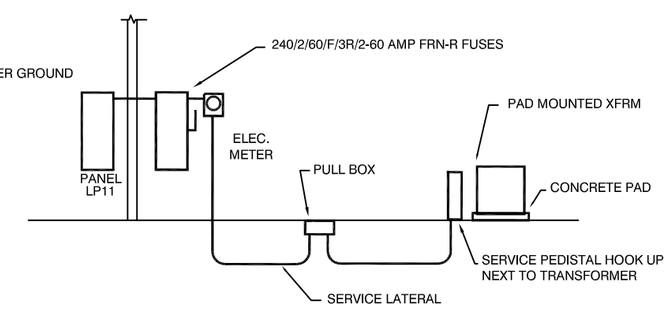

ELECTRICAL ONELINE

NTS

LIGHTING LEGEND

J — 1'X4' SURFACE MOUNT FLUORESCENT

A — FIXTURE DESIGNATION

SINGLE POLE SWITCH, WEATHERPROOF COVER.

POWER LEGEND

DUPLEX RECEPTACLE, GROUND FAULT CIRCUIT INTERRUPT TYPE, WEATHERPROOF COVER AND ENCLOSURE, MOUNT 24" ABOVE FLOOR.

H.P. RATED DISCONNECT. VOLTAGE/POLES/AMPS/FUSED/NEMA RATING/FUSES

PANELBOARD

CIRCUITS LEGEND, LIGHTING AND POWER

HOME RUN, ADD NUMBER OF ARROWS AS REQUIRED FOR TOTAL NUMBER OF HOME RUN CIRCUITS

J — J-BOX

SHORT LINE INDICATES NEUTRAL WIRES AND LONGER LINE INDICATES PHASE CONDUCTORS. ONE EQUIPMENT GROUND ALSO REQUIRED.

LP12-12,14 — PANELBOARD NAME - PANELBOARD BREAKER SPACE(S)

BRANCH CIRCUIT IN CONDUIT, HIDDEN IN WALL OR CEILING. 2 WIRES WITH ONE EQUIPMENT GROUND.

BRANCH CIRCUIT IN CONDUIT, BELOW FLOOR. 2 WIRES WITH ONE EQUIPMENT GROUND.

CALL UTILITY NOTIFICATION CENTER OF COLORADO

1-800-922-1987

OR 534-6700 IN METRO DENVER

CALL 2 BUSINESS DAYS IN ADVANCE BEFORE YOU DIG, GRADE, OR EXCAVATE FOR THE MARKING OF UNDERGROUND MEMBER UTILITIES

HDR

HDR Engineering, Inc.

ISSUE	DATE	DESCRIPTION
4	2/22/08	100% FINAL DESIGN
3	1/15/08	100% DESIGN REVIEW SUBMITTAL
2	7/13/07	90% DESIGN REVIEW SUBMITTAL
1	4/27/07	30% PRELIMINARY DESIGN

PROJECT MANAGER	JOHN SEYER
PROJECT NUMBER	000000000058704

COLORADO LICENSED — JOHN SEYER — 18394 — 02/22/08 — PROFESSIONAL ENGINEER

NOT VALID UNLESS SIGNED & DATED

Prairie View Drive

The City of Evans COLORADO

ELECTRICAL PLAN AND DETAILS

FILENAME	00G-BD01-01.dwg
SCALE	
SHEET	E1

3/5/2008 12:03:35 PM